LEWA GmbH

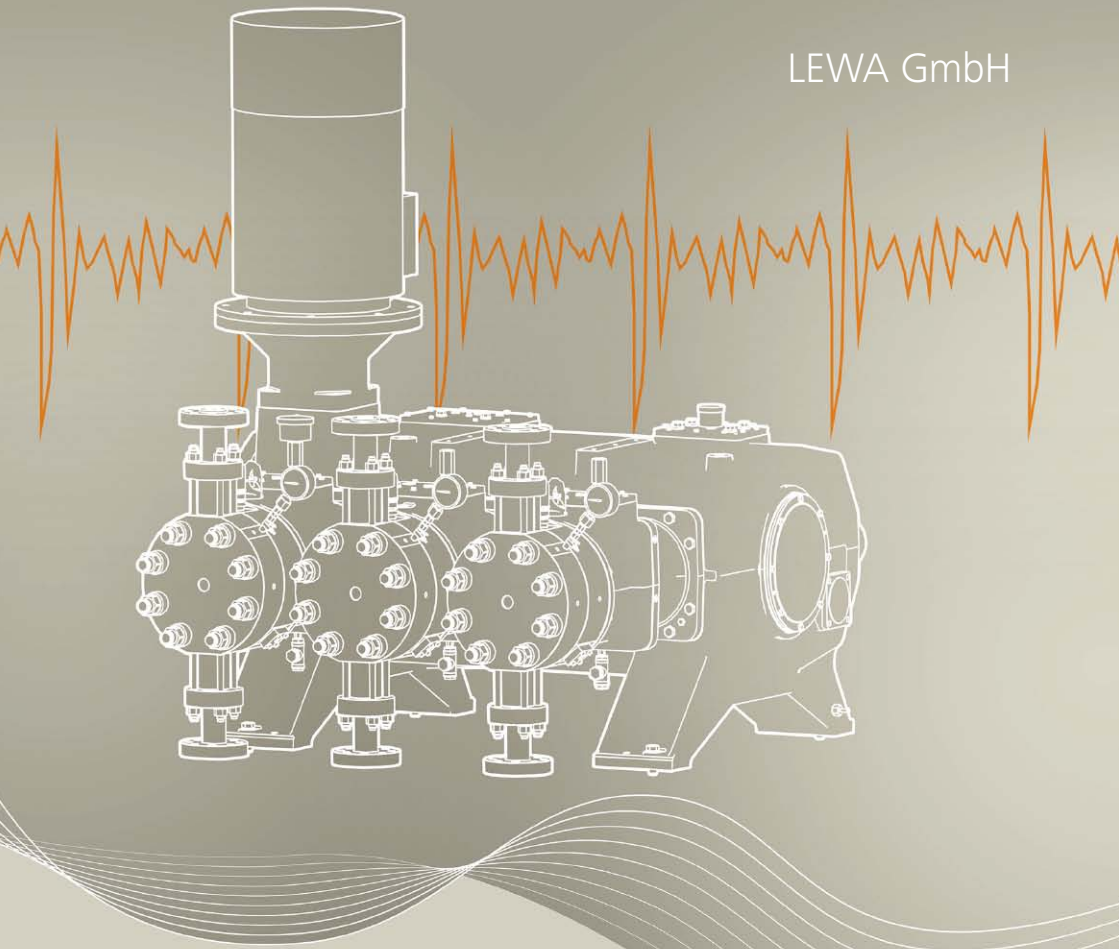

Reciprocating positive displacement pumps

Technical basics and applications

Reciprocating positive displacement pumps

Technical basics and applications

Typesetting and layout: markenkrieger e. K.
Technical editing: TechniTeX®
Translation: oneword GmbH

Edition 1, 2018

Content

1 Introduction

In this chapter, you will get an overview of the most common pump types and their designs. The operating principles as well as the advantages and disadvantages of each pump type and its fields of application are presented. This chapter will cover the applications of diaphragm pumps in greater detail. The basic formulas and important parameters for designing reciprocating positive displacement pumps are specified.

1.1 Foreword

The pump is one of mankind's most important inventions. The Ancient Greeks and Romans even used reciprocating pumps to convey water. As early as the High Middle Ages, water pumps in the Netherlands were used to drain whole cities.

Today, the application areas of pumps include much more than simply pumping or transporting water. Fluids with many different properties have to be conveyed in a wide range of industrial applications. Rewarding to this fact, there are so many different pump types today.

Reciprocating positive displacement pumps are the main focus of this book, which is aimed primarily at planners, purchasers and operators of pumps and systems, as well as toward seminar participants and students. It aims to provide a comprehensive overview of the technology, design and application of reciprocating positive displacement pumps. For the sake of completeness, other pump types are also discussed briefly.

1.2 Pump technology systems

Most pumps used in industrial settings can be divided into flow pumps and positive displacement pumps according to their underlying working principle.

Centrifugal pumps, a type of flow pump, are the most widely used pump type. In this type, the fluid flows through the machine continuously.

Displacement pumps are differentiated into rotary and reciprocating positive displacement pumps. Here, individual volumes of equal size flow through the machine discontinuously.

Rotary positive displacement pumps include, for example, progressive cavity pumps, rotary piston pumps, gear pumps or screw spindle pumps. Reciprocating positive displacement pumps include various plunger pump designs, such as the diaphragm pump.

The diaphragm pump is an advancement of the plunger pump. The fluid to be conveyed is separated from the drive side by a diaphragm. This creates a hermetically tight working space. There are no external emissions and no possibility of the fluid becoming contaminated. As a result, the drive and the environment are protected from harmful fluids. Figure 1.1 provides an overview of the pump types and their designs.

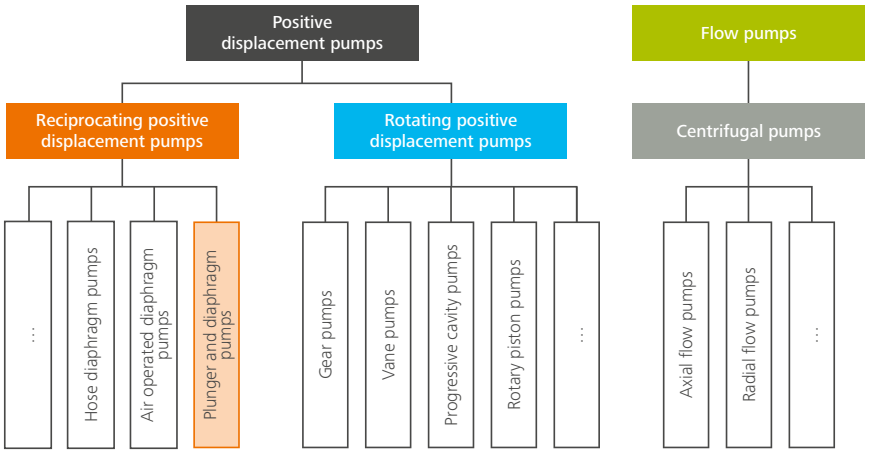

Figure 1.1: Classification of pumps

1.2.1 Centrifugal pumps

Centrifugal pumps work according to the hydrodynamic principle, meaning that rotating impellers inside the pump transfer kinetic energy to the conveyed fluid. Figure 1.2 shows the functional diagram of a centrifugal pump using a radial pump as an example. Centrifugal pumps are used in nearly all application areas due to their variety of designs. The main application area is the conveyance of large flow rates at relatively low pressure, rarely above 10 bar. In this application area, centrifugal pumps are the most economical solution. Circulating pumps are frequently used in heating systems. Other application areas include power plant engineering, using boiler feed, condensate and coolant pumps, and shipbuilding, which features coolant, fire extinguisher, bilge and ballast pumps. Centrifugal pumps do not typically achieve the energy efficiency of reciprocating positive displacement pumps in operation. Changing the operating points of the centrifugal pump by throttling or bypass is always associated with energy losses.

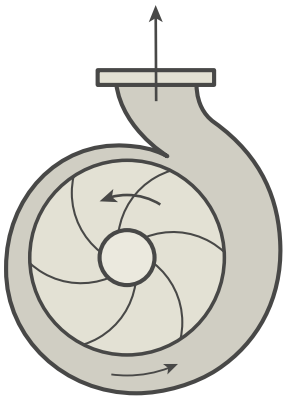

Figure 1.2: Radial pump, schematic drawing

Centrifugal pumps used in industry applications are standardized in many areas, such as the standardized chemical pump. Standardized pumps are always interchangeable, regardless of brand.

Primary advantages:
- Simple operating principle
- High delivery rate at low pressure
- Widely used pump technology
- Low investment costs

Primary disadvantages:
- Throttling or bypass causes energy losses
- Characteristic curve is strongly pressure-dependent
- Efficiency depends on impeller shape and location of the operating point on the curve
- Not dry-run safe

Performance spectrum:
- Pressure up to 180 bar for large multi-stage pumps, for high-speed pumps up to 300 bar
- Flow rate up to 100,000 m^3/h
- Temperature range from -130 °C to 300 °C
- Viscosity up to 1,000 mPa·s; individual solutions are also possible

1.2.2 Rotary positive displacement pumps

In positive displacement pumps, the mechanical energy of a displacer in a closed space is transferred to the conveyed medium and increases its potential energy. In the case of a rotary positive displacement pump, the displacer, as the name suggests, carries out a rotating movement. There are a diverse range of shapes for displacers, including screws, gears and rotary pistons.

Figure 1.3 shows the typical structure of a rotary positive displacement pump using a rotary piston pump as an example.

The conveyed fluid is either pumped in the circumferential direction of the surrounding housing or in the axial direction of the displacer from the suction side to the discharge side.

Process valves are not needed. The suction and discharge sides are separated from each other in every phase of operation by a sealing gap. This gap is formed using a displacer/housing combination or, in the case of multiple displacers, a displacer/displacer combination. In special cases, it is achieved using specific separating elements.

Rotary positive displacement pump cause high or low pulsations depending on their designs.

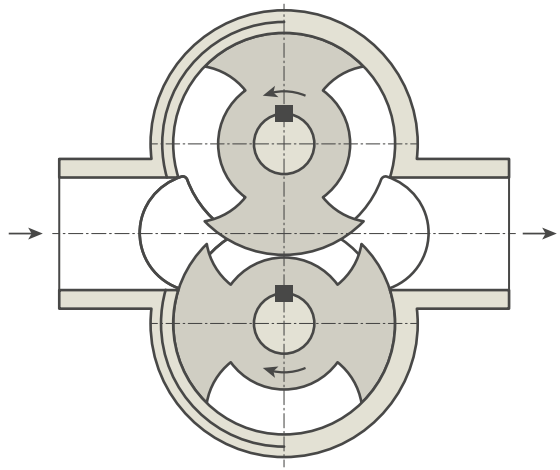

Figure 1.3: Rotary piston pump, schematic drawing

While the maximum attainable discharge pressure is limited by the strength of the housing, the maximum attainable pressure difference is defined by the extent of leakage losses through the sealing gap, which is caused by the backflow of the conveyed fluid from the discharge side to the suction side. These losses are generally proportional to the pressure difference and the gap width cubed. They depend on the shape and location of the gap as well as on the surface roughness, the viscosity of the conveyed fluid and the flow state in the gaps.

Applications for rotary positive displacement pumps range from conveying self-lubricating fluids, such as lubricating oil and hydraulic oil, to conveying viscous fluids, such as adhesives, pastes and fluids with solid admixtures. However, most designs are very sensitive to abrasive admixtures due to the low clearances between rotating and fixed components. Furthermore, a relatively large amount of fluid is exposed to shear stresses, i.e. the conveyance is less gentle and therefore only suitable to a limited extent for food products and sensitive organic substances. Unlike reciprocating positive displacement pumps, rotary pumps have no oscillating masses and no valves. As a result, it is possible to achieve greater speeds and smaller, space-saving designs with direct coupling to electric motors.

Examples of rotary positive displacement pumps and their application areas:
- Progressive cavity pump: construction industry, chemical industry, agriculture
- Rotary piston pump: gentle conveyance, volatile and non-lubricating fluids, vacuums
- Peristaltic pump: gentle conveyance, hygienic areas
- Screw spindle pump: oil and gas industry, counters
- Gear pump: self-lubricating high-viscosity fluids
- Vane pump: high suction capacity, vacuums

Primary advantages:
- Conveying direction usually reversible
- Relatively steady flow rate
- Self-priming
- Dry-run safe under certain conditions
- Low investment costs

Primary disadvantages:
- Low clearances require very high production accuracy
- Large internal leakages
- Strong pulsating flow for some designs, e.g. up to more than 100% for the peristaltic pump

Performance spectrum:
- Pressure up to 300 bar
- Flow rate from a few ml/h to approx. 340 m^3/h
- Temperature up to +450 °C
- Viscosity up to approx. 400,000 mPa·s

1.2.3 Reciprocating positive displacement pumps

This description is given by the reciprocating movement of the displacer, in the form of a plunger or a diaphragm, which alternately increases and decreases the working space. In order to prevent return flow of the conveyed medium, the working space has to be closed by two valves. Figure 1.4 shows the functional diagram of the reciprocating positive displacement pump using the plunger pump as an example.

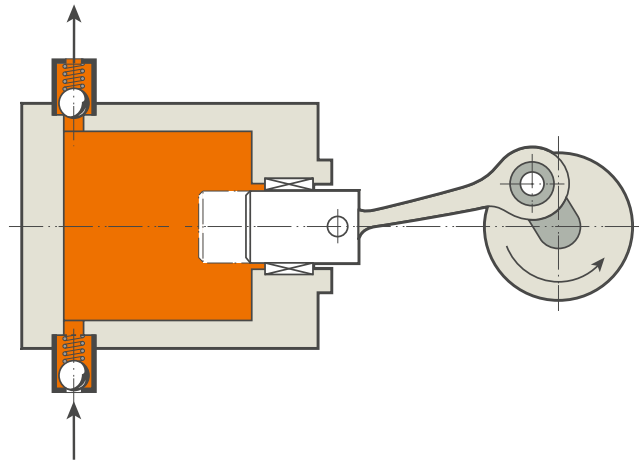

Figure 1.4: Reciprocating positive displacement pump, schematic drawing

During the backward movement of the displacer, the working space increases and a vacuum is formed relative to the pressure in front of the automatic suction valve. Due to this pressure difference, the suction valve opens and the conveyed fluid is sucked into the working space. Once the displacer reaches its rear dead-center position, the suction stroke ends. The suction valve closes by its own weight or by an additional spring load. During the forward movement of the displacer, the working space decreases. As a result, the pressure increases. When the pressure increases to slightly above the discharge pressure, the automatic discharge valve opens and the fluid volume is now discharged from the working space. In the front dead-center position, the pressure valve closes. Then the next stroke cycle begins.

In most reciprocating positive displacement pump designs, the flow rate depends only minimally on the discharge pressure. This entails a rigid pressure characteristic curve. Furthermore, the flow rate has a linear dependency on the stroke length and stroke frequency. Reciprocating positive displacement pumps are therefore suited to the conveyance and precise metering of fluids across a wide pressure and flow rate range.

A significant disadvantage compared to flow pumps is that the flow rate is not continuous. Instead, there is a pulsing, almost digital flow rate which, if undesirable, has to be reduced using suitable pulsation suppression devices or multiplex pumps. Figure 1.5 shows a diagram of the flow rate for a one-cylinder pump over time.

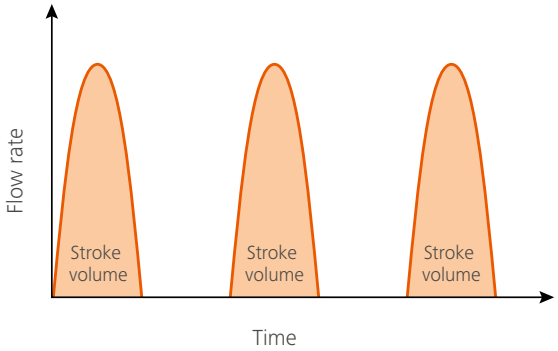

Figure 1.5: Pumping characteristic of a one-cylinder reciprocating positive displacement pump

Due to their design and limited speed, reciprocating positive displacement pumps do not reach the flow rates of other pump designs, such as centrifugal pumps.

Leak-free variants, i.e. hermetically tight diaphragm pumps, expand the application range of reciprocating positive displacement pumps enormously. As a result, it is possible to convey both fluids with special properties, such as abrasive, explosive or corrosive fluids, as well as food products or medication under sterile conditions.

The application areas of the diaphragm pump range from manufacturing chemical intermediates and end products, to cracking and reforming processes in the petrochemical industry, to the food, pharmaceutical and biotechnology industries, to recipe mixing, hygienic processing as well as sterile metering.

The diaphragm can be driven pneumatically, mechanically or hydraulically. Diaphragm pumps with a hydraulically driven diaphragm are relatively elaborate and thus expensive due to their design. However, they offer a range of advantages in their application.

Primary advantages:
- Extremely rigid pressure characteristic curve
- Hermetically tight
- Very precise metering
- Dry-run safe
- Self-priming under certain conditions

Primary disadvantages:
- Flow rate limited to approx. 1,500 m³/h
- Pulsating flow rate
- High investment costs

Performance spectrum:
- Pressure range from vacuum up to 1,200 bar (max. 3,500 bar)
- Flow rate of 1 ml/h to 1,500 m³/h
- Temperature range from -270 °C to +500 °C
- Viscosity range from 0.1 to 100,000 mPa·s

Since displacement pumps convey a defined volume per stroke or revolution regardless of the differential pressure, they can be used for precise fluid metering, and are therefore also called metering pumps. In this book, the term "metering pump" is used for reciprocating positive displacement pumps, although rotary positive displacement pumps are also a type of metering pumps.

In this book, the term "process pump" is also used for pumps with high hydraulic power. Depending on the application, process pumps may focus purely on conveying fluid, i.e. transferring it without metering. However, process pumps can also be used for precise metering.

1.2.4 Comparison of the different pump types

As already mentioned, reciprocating positive displacement pumps have an extremely rigid pressure characteristic curve. With rotary positive displacement pumps, the flow rate depends more on the pressure, as the leakage losses through the sealing gaps are directly depending on the differential pressure. Due to their operating principle, the flow rate of centrifugal pumps directly depends on the discharge pressure. Figure 1.6 provides a qualitative depiction of the flow rates of these three pump types as a function of discharge pressure.

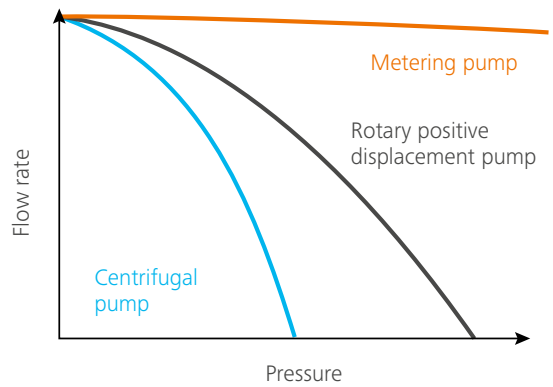

Figure 1.6: Flow rate curves for different pump types

When it comes to selecting a suitable pump, it is generally correct that centrifugal pumps are used primarily at high flow rates and low pressures, while displacement pumps are suitable for high pressures and low flow rates. The exact application area with respect to pressure and flow rate depends on the design, as illustrated by Figure 1.7.

Certainly, there are overlaps, i.e. some application areas are covered by different pump designs. Other selection criteria have to be taken into account. Application areas that require precise metering call for displacement pumps. If hermetic sealing is required, diaphragm pumps are the right choice. Here, however, it should be mentioned that other pump designs can also be constructed to be hermetically tight, e.g. using canned motors.

However, technically feasible application areas are often abandoned due to economic aspects or predetermined infrastructure, e.g. an existing pump pool.

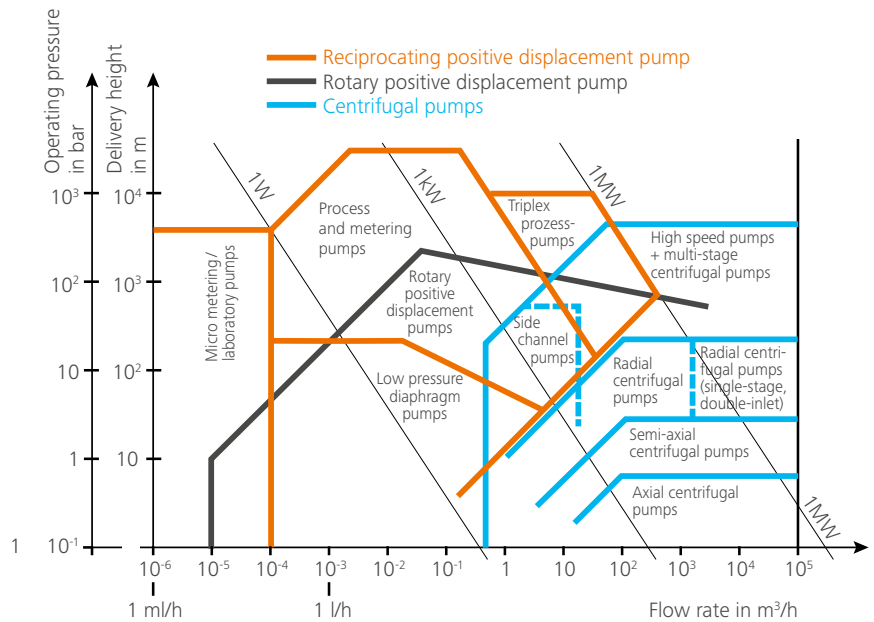

Figure 1.7: Pressure/flow rate diagram for various pump designs

1.3 Application areas of diaphragm pumps

Diaphragm pumps are suitable for pumping different fluids. The safe transport of toxic, highly acidic or basic substances as well as abrasive, combustible and environmentally hazardous materials opens up numerous application options for diaphragm pumps in the chemical industry. In this industry, systems and chemical pumps for critical processes need to be safe and reliable. In practice, diaphragm pumps are used both for manufacturing various chemicals, often under extreme conditions such as high temperatures and pressures, as well as for precisely metering micro flows in laboratory environments.

Diaphragm pumps are frequently used in the oil and gas industry. In oil production, for example, for chemical injection to treat oil, gas or water, and also for gas drying, diaphragm pumps ensure reliable operation and high process safety. Depending on the discharge pressure and flow rate, various materials can be used for the diaphragm. Elastomers and thermoplastics such as PTFE or metal diaphragms are common.

Diaphragm pumps are also used in gas odorizing systems. In these systems, the pumps meter a strong-smelling gas into odorless natural gas or into LNG/LPG/CNG (liquefied natural gas, liquefied petroleum gas, compressed natural gas). This is done for safety reasons, since escaping gas is highly dangerous. Leaks must be detected early to avoid explosions and accidents. For example, the diaphragm pumps are operated in odorizing systems at gas pressure regulation stations, "gate stations" or junction points in the natural gas distribution grid and in LPG odorizing at gas stations and filling stations.

Operators in refineries and downstream applications also benefit from low-maintenance diaphragm technology. For special applications a remote head design can be used, a special design where the drive unit is spatially separated from the pump head, e.g. for manufacturing biofuels, since temperatures up to 400 °C occur in these applications.

Multiplex diaphragm pumps are suitable for mixing various components into one end product. A process called "recipe metering" allows ingredients to be mixed together in various proportions. Thanks to the modular design, drive elements with different reduction ratios and stroke lengths can be combined. This allows the individual pump elements of the multiplex pump to run at different speeds and flow rates. Thus, various fluids, which may have drastically different viscosities, can be conveyed and mixed efficiently and cost-effectively using one drive.

Diaphragm pumps with hygienic design meet the requirements of the food industry with respect to product sterility, cleanability, sterilizability and material surface roughness. Hygienic diaphragm pumps are used for manufacturing drugs and pharmaceuticals, metering additives, diluting buffers, and as a part of process chromatography systems.

In general, diaphragm metering and process pumps are used when hazardous or high-viscosity media need to be pumped or when dry running is a concern due to process conditions. Because the separating diaphragm ensures mutual shielding for the pumped fluid and drive, the diaphragm pump guarantees that the respective fluid is pumped safely, reliably and without leaks, thus solving one of the main problems with plunger pumps.

1.4 Design of metering pumps

In order to select the right metering pump, a series of fluid properties and process parameters must be taken into account. The most important are the necessary flow rate and the hydraulic power. The following sections address the way these values are calculated and the influence of the design criteria.

1.4.1 Design formulas

Flow rate

The theoretical flow rate $\dot{V}_{th}$ of a reciprocating positive displacement pump is calculated by multiplying the stroke volume V_s by the number of strokes n and the number of pump cylinders i. The stroke volume is calculated by multiplying the plunger surface area A_p with the stroke length s:

$$\dot{V}_{th} = V_s * n * i = A_p * s * n * i \quad (1\text{-}1)$$

Due to the compressibility of fluids in the pump working space, the elasticity of the pump housing, backflow losses during the valve closing process as well as minor leakages through the plunger seal, the actual flow rate $\dot{V}$ is less than the theoretical flow rate $\dot{V}_{th}$. These losses are represented by the volumetric efficiency η_v.
The actual flow rate can be calculated as follows:

$$\dot{V} = \dot{V}_{th} * \eta_v \quad (1\text{-}2)$$

The mass flow $\dot{m}$ can be calculated by multiplying the volume flow rate by the density ρ:

$$\dot{m} = \rho * \dot{V} \quad (1\text{-}3)$$

Hydraulic power

The hydraulic power P_{hyd} is calculated from the differential pressure Δp between the inlet and outlet sides and the flow rate $\dot{V}$:

$$P_{hyd} = \Delta p * \dot{V} \quad (1\text{-}4)$$

During the initial design steps for a reciprocating positive displacement pump, the hydraulic power can be used to come up with a rough estimate for the pump size. Estimating the drive power based on the hydraulic power is addressed in greater detail in chapter 5 "Economic Efficiency".

Head

The head is generally used for designing centrifugal pumps. Due to the prevalence of centrifugal pumps, the term "head" is also used for other pump types, although it is more common to design reciprocating positive displacement pumps based on the discharge pressure. Thus, the following explains the definition of head and how it is converted into pressure:

The head H is defined as the usable mechanical work transferred from the pump to the pumped fluid with respect to the weight force of the pumped fluid. It is possible to calculate the head from the discharge pressure p using the density of the fluid ρ and the gravitational acceleration g as follows:

$$H = \frac{p}{\rho g} \quad (1\text{-}5)$$

The unit of head is the meter m. The SI unit for the pressure is the pascal Pa. When designing pumps, the bar or psi is usually used as the unit of pressure.

1.4.2 Design criteria

The main criterion when selecting and designing a metering pump is compliance with the specified operating data or the functional specification. At the same time, effort should be made to keep life cycle costs to a minimum. Because the purchasing decision for this kind of investment item largely depends on the investment costs, these costs have a crucial effect on the pump selection. It is necessary to identify components affected by wear and corrosion in order to pursue the corresponding solution concepts to ensure an adequate service life along with low maintenance costs. It is also recommended that the system be viewed as a whole, since the function of the pump may be influenced by the piping installation.

The modular design principle of many manufacturers allows for a variety of design options. Thus, the first issue to resolve is which operating data or boundary conditions are critical for selecting a pump that is technically suitable for the purpose.

Hereinafter, these parameters are broken down into process parameters, fluid properties, and ambient conditions, and briefly described in terms of their importance for the pump design. Chapters 2 "Technology" and 4 "Integrating metering pumps into the overall system" provide further detailed information on this.

Process parameters

The model and the size of the pump are primarily determined by the process parameters, which include the pressures on the suction and discharge side, the flow rate and the fluid temperature. In addition, design pressures and design temperatures may place higher requirements on the pump.

It is generally necessary to be familiar with all process parameters; minimum and maximum values, covering every possible operating state. For example, if a range is defined for the flow rate, not just a single operating point, then a stroke adjustment and/or a motor suited to the frequency inverter must be taken into account for reciprocating positive displacement pumps.

Fluid properties

Fluid temperatures determine the design of the pump head. Depending on the diaphragm material (PTFE, stainless steel, Hastelloy etc.), temperatures in a range of - 20 °C to 200 °C are permitted without any additional constructional measures. This temperature range can be expanded using remote head solutions, as doing so decouples the process fluid from the drive unit. As a result, critical process conditions such as extreme temperatures or even radioactive radiation can be kept from affecting the displacement system, guaranteeing high system safety. Using this technology, temperatures up to 500 °C can be implemented.

If there is a major temperature difference between the fluid and the environment, a constant fluid temperature can be maintained in the pump heads using a heating or cooling jacket and/or insulation. High fluid temperatures result in increased heat transfer from the pump head to the drive unit. To ensure that this does not negatively impact the service life of the drive unit, cooling coils are built into the hydraulic oil reservoir.

The fluid temperature has a critical influence on the fluid properties themselves. Viscosity, density, vapor pressure and compressibility are dependent on temperature. The definition of a wide temperature range results in the corresponding ranges for the listed fluid parameters. The most unfavorable operating point has to be evaluated, considering the entire range of all fluid parameters.

The viscosity affects the selection of the valve and the stroke frequency. At high viscosities, the closing delay of the valves must be taken into account in order to avoid a drop in flow rate. At the same time, to compensate for high viscosities, a moderate pump speed can be selected, which reduces the inlet pressure loss created by the inflow of the fluid flowing at the suction valve and inside the pump head. However, investment costs must also be considered. These costs can be reduced by selecting a smaller and more cost-effective pump that runs at a higher stroke frequency. At viscosities less than 1 mPa·s, occurring for instance with liquefied gases, there are suitable valve variants. This increases the service life of these wear parts.

The density is needed when a mass flow is being specified. The volume flow rate is always used to design pumps and, as a result, it must be determined from the mass flow.

The vapor pressure has to be taken into account in the context of suction pressure as well as the pressure losses in the pump head and suction line. This is vital to avoid cavitation in the suction line and in the pump. For vapor pressures close to the suction pressure, it is necessary to optimize the inlet pressure loss through the selection of the valves and stroke frequency. Pump heads with heating/cooling jackets are used to cool the fluid in order to take advantage of the fact that the vapor pressure heavily depends on the temperature, e.g. for liquefied gases. For example, in CO_2 applications, cooling by 5K in the temperature range above 0 °C makes it possible to reduce the vapor pressure by 5 bar or more. As an alternative, booster pumps can be used if necessary.

The compressibility of a fluid determines the flow rate of the pump. If there is a large pressure increase, its influence is significant, again, especially in the case of liquefied gases. As the fluid temperature decreases, the compressibility decreases as well. Knowing about this relationship allows for smaller pumps to be designed. At the same time, the fact that the heat of compression results in heating of the pump head must be taken into account in liquefied gas applications. A cooling device in the form of a heating/cooling jacket can be installed in these cases.

Other important fluid properties for selecting a pump include the fluid composition or concentration of its components, the solidification point and the solid content. Knowledge of the fluid composition is crucial for selecting suitable materials for wetted components, both in terms of corrosion as well as abrasion by hard materials. Regarding the resistance and service life, the assessment of the materials used must always take the fluid temperature into account.

The solidification point determines whether or not a heated pump head is required. Melts are not in the liquid phase at ambient temperature. Therefore, the head must be brought to the right temperature before the pump is started up so that the fluid is flowable.

Diaphragm pumps can be designed for metering suspensions and sludges. For this purpose, there are suitable suspension valves. Depending on the solids concentration, particle size, particle density and the resulting settling rate, either moderate stroke frequencies are recommended to reduce suction pressure loss, or faster stroke frequencies are recommended to keep the suspended particles from settling in case of high settling rates. The hardness of the particles determines the material pairing for the valve parts.

Ambient conditions and installation sites

Ambient conditions such as temperature, direct sunlight, humidity, salty air in marine environments, explosive environments, sand storms in desert areas and earthquake zones are also important for designing the pump. At high ambient temperatures and simultaneously high drive loads, a cooling system for the drive unit may be necessary. Fur-

thermore, all technical components, such as motors, electric actuators and instruments, must be designed for the maximum and minimum ambient temperatures. This can be supplemented by other constructive measures, such as sun shields and housings for low temperatures, to enable trouble-free use in regions with desert, tropical or continental climates.

Marine or other corrosive ambient conditions result in higher rates of surface corrosion. A suitable offshore painting system can therefore guarantee a long service life. Here, DIN EN ISO 12944 specifies C5-M as the highest corrosion protection class.

The explosion zone classification determines the technical design for all electrical and mechanical components. If the available supply voltage fluctuates, this must be taken into account when selecting the motor. A specified earthquake zone affects the design of the steel structures for the pump, like the base plate and the motor flange.

Process parameters, fluid properties and ambient conditions are all very important for designing the pump. These factors must be discussed in detail with the pump manufacturer in order to ensure the function of the pump even at extreme operating and boundary conditions over a long period.

Technology

2

In this chapter you will learn the function of the most important components of reciprocating positive displacement pumps. A lot of manufacturers offer a modularized pump program with a range of components to suit many special requirements. Therefore, the chapter is structured module oriented in drive and drive unit components, pump heads, fluid valves and diaphragms. Particular attention was paid to concepts customary in the market. For a better explanation of the current status, the basic features in the area of pump head technology are described as an evolutionary development process.

2.1 Modularity of reciprocating positive displacement pumps

Reciprocating positive displacement pumps can be used to convey a wide variety of liquids in various industries and processes within a broad spectrum of pressure and performance because of their many advantages. Reciprocating positive displacement pumps are usually provided in a modular system with interchangeable pump components. Thus, they can be used by pump operators in an economically reasonable way to cover such a broad range of applications with complex requirements.

2.1.1 Pump construction kit

Flexible solutions can be configured with a modular construction kit. These construction systems allow the use of specific, customized parts in certain places in order to meet the special, individual requirements of the customer. At the same time, they allow the use of cost-effective serial parts for the rest of the pump to reduce construction and cost efforts.

Depending on market demand, pump kits are more or less extensive. It can be observed that kits for small pumps are generally larger than those in high performance classes. The reason for this is the higher number of small pump units sold.

Despite the market of diaphragm metering pumps being comparatively small, it features a very wide variety of different technical solutions and products. Diaphragm metering pumps are used to convey flow rates from a few millimeters per hour all the way up to hundreds of cubic meters. Discharge pressures can range from a few millibar to well over a thousand bar. Without the highly sophisticated construction kits of reciprocating

pumps, industrialization would not be thriving as much as it is in many chemical and pharmaceutical sectors, in the food industry or in the oil and gas industry.

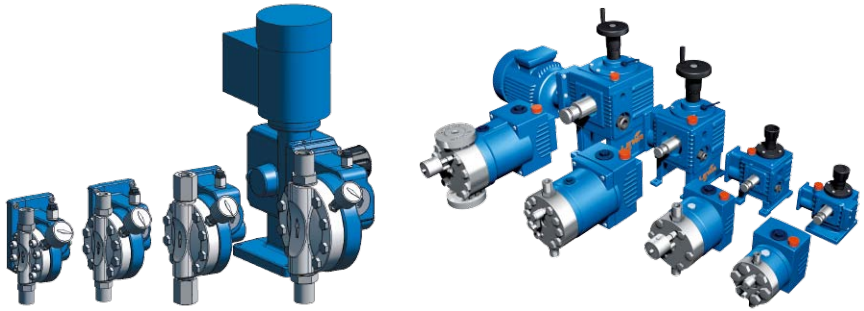

Figure 2.1: Modular system in the lower and medium performance class

Figure 2.1 shows examples of modular systems in the lower and medium performance class while figure 2.2 shows an example of a high performance class system.

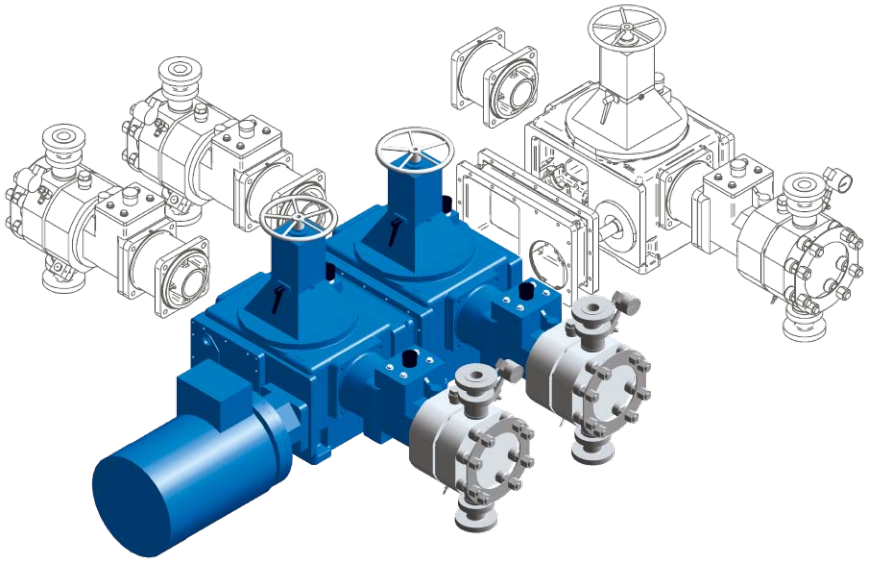

Figure 2.2: Modular system in the high performance class

2.1.2 An overview of construction kit components

The main components of a reciprocating positive displacement pump kit, pictured in figure 2.3, include the following:

- Drive, e.g. electric motor
- Drive unit, e.g. gear for increasing torque and housing a crank drive
- Diaphragm pump head, e.g. with plunger and hydraulic part for driving the diaphragm
- Fluid valves for controlling the flow
- Valve body for adaptation to the specific customer piping

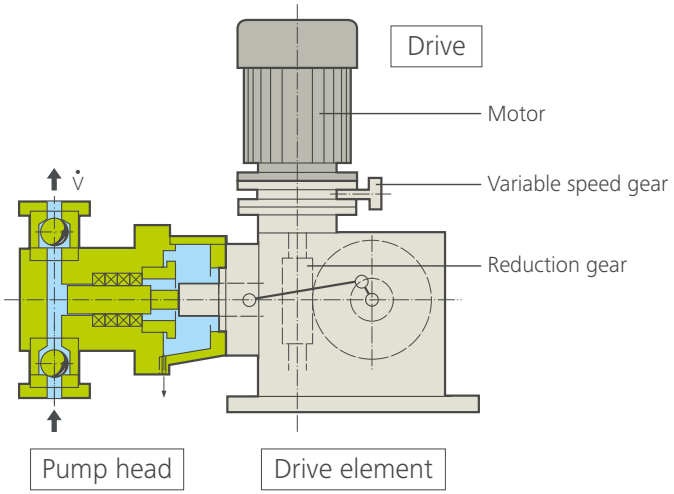

Figure 2.3: Pump components

The variability and economy of the kit are the result of both practical standardization and proper flexible design of relevant components. Optimal function, good efficiency and suitable material variants are the decisive factors here. The main components of a metering pump are structured as follows:

Drive

The pump drive converts primary power into secondary power.

This mostly involves converting electrical power into mechanical rotary motion. Typically this is done using standard electric 3-phase motors selected according to respective power requirements. To adjust the flow rate, 3-phase motors can provide variable speed when combined with electric frequency inverters.

In specific cases, combustion engine and gas or compressed air motors are used. For very accurate and adjustable control of the metering pump servo-motors are used featuring rotary movement that can be finely controlled within a very broad speed range.

Electromagnets are used as drives for small metering pumps. In rare cases, pneumatic or hydraulic stroke cylinders are used.

Drive unit

The drive unit transforms the rotary motion of the drive, i.e. shaft power, into a linear back-and-forth movement, a reciprocating motion. The most common drive unit type used for this function is the crank drive.

A gear for reducing the speed and increasing the torque of the crank drive is usually integrated into the drive unit as an additional functional element.

The drive units of a construction kit are each used for a certain performance range. Therefore, it is possible to meet a number of different performance requirements with the same drive unit size and to use common parts in doing so. Within one drive unit size, various gear reduction ratios can be interchanged to realize the best solution for the customer's requirements by changing only this variable. This lowers costs and the effort to create the customer's special pump.

Systems in the low-performance ranges use simpler cam and spring drives or even wobble plate driving mechanisms.

Many drive units contain an additional variable module element. They feature stroke length adjustment for manipulating the flow rate. This adjustment can be made manually, electrically or pneumatically.

In addition, certain pump series allow drive units to be combined, for example to create a "recipe pump" for parallel metering of various fluids into one process line.

Pump head

The pump head converts the reciprocating linear motion of the drive unit into hydraulic power, which ultimately corresponds to liquid flow and pressure increase, i.e. the pumping effect.

In plunger pump heads the reciprocating plunger acts directly on the pumped liquid as a displacement body. The plunger draws the liquid into the pump body and then forces it out again.

In diaphragm pump heads a flexible diaphragm is used as a displacement body that eliminates dynamic seals in contact with the pumped liquid.

In mechanically actuated diaphragm pump heads the reciprocating movement from the drive unit or drive is transferred directly to the mechanically coupled diaphragm, which replaces the plunger as the displacer.

In hydraulically actuated diaphragm pump heads the plunger and the diaphragm act as displacers simultaneously. This design involves the reciprocating plunger displacing a hydraulic fluid located in a pressure chamber. The diaphragm is part of the pressure chamber and functions as a flexible boundary of this chamber. So the displaced hydraulic fluid pushes the diaphragm and the diaphragm displaces the pumped fluid in an additional chamber, i.e. the working chamber.

The variability of this pump component is achieved by plungers and diaphragms in various diameters. Plunger diameter and diaphragm diameter are selected depending on the customer's specifications with respect to discharge pressure and flow rate. These particular parts are usually available in optimized technical and economical stepping, which means they do not have to be redesigned and produced for each individual set of customer specifications.

Furthermore, there are standard materials for parts that come into contact with the pumped fluid, the so-called "wetted parts". However, it is common to adapt these materials to the specific requirements with respect to material, surface quality and certification.

Fluid valves

In reciprocating positive displacement pumps the fluid valves ensure control of the flow of the fluid being pumped. These valves function as check valves allowing the fluid to flow in only one direction. On the suction side flow is directed into the pump head's working chamber and on the discharge side out of the working chamber and into customer's pipeline. Thus, there are always two fluid valves on the pump head: the suction valve, which is mostly located at the bottom of the head, and the discharge valve, which is on top to allow air to escape when the pump is initially started.

The fluid valves are the most flexible components of the pump. The nominal width of the valves is adapted to the flow rate, the structural strength to the discharge pressure, the design type to the stroke frequency, the material to the liquid pumped and the surface to the intended application. This is why such a large variety is found regarding fluid valves. In order to make this technically and economically manageable, standard installation interfaces and standard nominal widths are defined as well as pressure ranges for using the fluid valves.

Valve bodies

Valve bodies enable the connection of the pump to the hoses, tubes or piping of the system into which the pump needs to be integrated. They adapt the pump according to customer requirements and standard rules.

Also, the valve bodies are greatly varied. Like any wetted, pressure-bearing part, valve bodies are subject to requirements regarding flow rate, pressure, type of fluid and intended application. In addition, valve bodies must conform to various international screw-in, clamping or flange connection standards so the customer can integrate the pump into its system smoothly.

Conclusion

Drives from any performance class along with drive units combined with pneumatic, manual and electric adjustment based on variable eccentrics to achieve a variable fluid flow make it possible to create a custom design for the requirements at hand. Pump heads are available for various fluids, temperature ranges and pressures, and can be equipped with streamlined fluid valves. The pump bodies and fluid valves are also available with special surface finishes for special needs, e.g. for hygienic applications. The possibility to select various materials for wetted components provides an additional degree of freedom in relation to chemical resistance or certain material properties.

Servomotors represent the current state of the art of technology for drives. Their flexible speed and forward and reverse operability, accurate down to the degree, can make reduction gearboxes unnecessary while opening the door for production methods in which the flow rate is measured directly in the drive control unit. So accurate and reproducible metering becomes a standard, e.g. in areas with specific requirements like the pharmaceutical industry. For recipe metering in the plastics industry or when a compact structure is needed, e.g. in oil and gas production, the standard components can be installed in multiplex arrangements using an in-line or boxer design. Furthermore, hermetically tight sandwich diaphragms are available for metering pumps made of PTFE or in metal design for highest pressure range. These designs ensure that emissions as well as contamination of the fluid are avoided. The respective modular design concepts are enhanced by the addition of corresponding diaphragm monitoring and protection systems. These systems allow for safe operation, a long service life and excellent emergency running characteristics as well as the prevention of operating errors.

Figure 2.4: Triplex process pump

Apart from the modular concepts, the market offers other metering pump systems that are optimized for specific applications. Examples of these systems include purely mechanical plunger pumps with compact designs, which provide a cost-effective solution for simple metering tasks.

Additionally there are triplex and process diaphragm pumps for high performance ranges. They provide a low-pulsation solution for complex conveying tasks. In this performance class these designs are especially compact and achieve a higher efficiency than simplex pumps. Figure 2.4 shows an example of a triplex process pump.

2.2 Drive and drive unit components for metering pumps

The main function of the drive and drive unit components of reciprocating positive displacement pumps is to provide a reciprocating linear movement for driving the plunger or the diaphragm of a pump head. Figure 2.5 shows an overview of various drive unit designs with and without stroke adjustment.

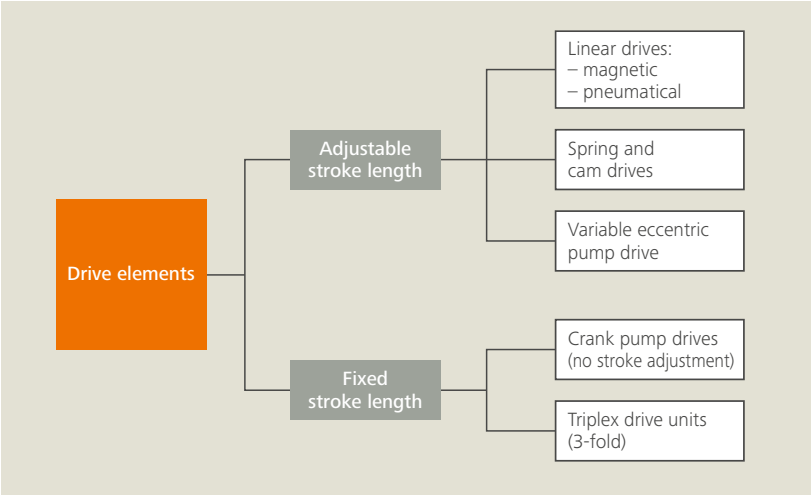

Figure 2.5: Drives and drive units for metering pumps

2.2.1 Drives and motors

The term "drive" refers to the group of all functional elements that take primary energy and convert it into the linear, reciprocating form of kinetic energy necessary for operating the pump.

The primary energy can take various forms, such as electric, pneumatic, hydraulic or chemical.

In addition to the motors working as the actual energy converters between electrical and mechanical energy, a power train may include frequency inverters and external gears where appropriate.

The secondary energy form is always mechanical energy. Depending on the type of kinetic energy delivered by the drive, it can either be applied directly, as in the case of linear drives, or has to pass through one more conversion step in the drive unit, as in case of rotating motors.

2.2.2 Linear drive – Direct drives for reciprocating pumps

The simplest solution for driving a reciprocating positive displacement pump is to directly convert electric, hydraulic or pneumatic energy using electromagnets, a linear motor or a stroke cylinder that is operated pneumatically or hydraulically. Figure 2.6 shows a schematic example of a linear drive using an electric solenoid.

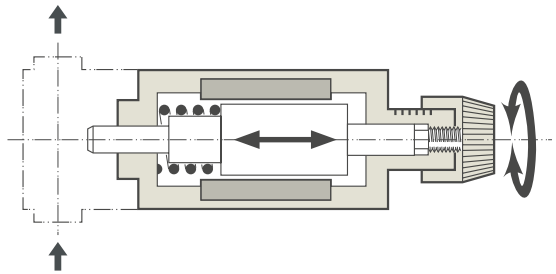

Figure 2.6: Electric solenoid with stroke adjustment

In principle, the electromagnetic or pneumatic linear drive is the ideal drive for metering pumps. It delivers the kinetic energy directly in the desired linear and reciprocating form. No additional mechanical transformation is necessary as it would be for rotating electric motors or other rotating drives.

This eliminates the gear and the crank mechanism, and adjustment of the stroke length is also simple.

The advantages of a solenoid actuator include both the elimination of the mechanical overload protection, since the metering pump simply comes to a standstill in the event of overload, and the easy adjustment of the stroke frequency by electrical means. Figure 2.7 provides an example of an electromagnetic metering pump.

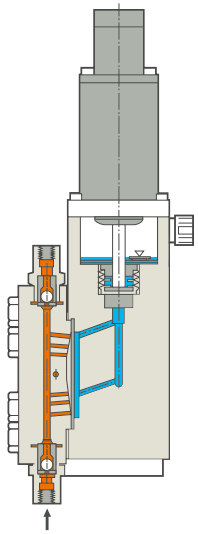

Figure 2.7: Example of an electromagnetic metering pump

As a matter of principle, pneumatic drives offer better explosion protection than electric solutions.

Hydraulic drives allow large forces and make it relatively easy to control the stroke frequency. However, they require a relatively large effort in terms of providing the necessary hydraulic energy and control.

Both the electric and the pneumatic stroke drive are usually equipped with stroke adjustment. A threaded spindle can be used to adjust a stop axially in order to limit the return stroke of the magnet or the pneumatic cylinder. That is why these drive units have a constant dead center (see the dashed line in figure 2.8).

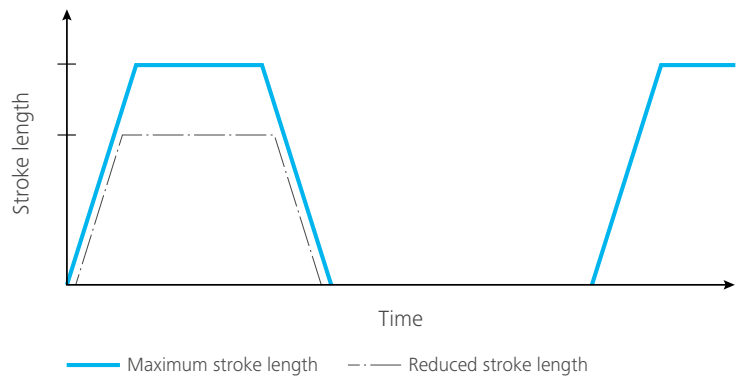

Figure 2.8: Stroke function for linear drives

Primary advantages:
- Straightforward mechanical structure
- Compact, cost-effective design
- Few moving parts resulting in a lower number of wear parts
- Simplified explosion protection for pneumatic cylinders
- Overload protection
- Easy stroke frequency adjustment (solenoid)
- Easy stroke length adjustment
- Constant front dead center when adjusting the stroke

Disadvantages of the electromagnet drives are usually the impact-type motion and a corresponding pulsation in the hydraulic and fluid part of the pump. Furthermore, only relatively low axial forces can be implemented using electromagnets.

In pneumatic drives, poor efficiency and high effort for noise protection get in the way of increasing the capacity. Thus, the use of linear drives is mostly limited to the low performance range.

Primary disadvantages:
- Impact motion sequence
- Relatively low axial forces
- Only suitable for small flow rates and pressures
- Higher sound level for pneumatic drive
- Poor efficiency for pneumatic drive
- High complexity for hydraulic drive

Areas of application:
- Gas odorization (also refer to chapter 6.2 "Odorization – Gas odorization in the natural gas distribution grid"), chemical process engineering
- Micro flow metering (also refer to chapter 6.12 "Drive technology – Continuous metering of micro flows")
- Laboratories and pilot plants

2.2.3 Rotating pump drives

All motor principles that convert the deployed primary energy into rotating kinetic energy, which is subsequently transformed into oscillating kinetic energy by drive units, constitute rotating pump drives. The most important principles will be presented below.

2.2.3.1 Electromotive drives

Electric motors are a standardized, cost-effective, long-lasting and tried-and-tested type of pump drive. That is why they are used in the majority of pump applications of all kinds.

International standardization relates to both the electrical aspects, with regard to power supply and frequency, as well as the mechanical aspects of the motor, in reference to mounting flange and drive shaft geometry.

One substantial selection criteria for the type of electric motor drive is determined by the electric energy supply available at the installation site. Power is most commonly supplied using a three-phase AC mains at different voltages and frequencies, providing the advantage of the rotating field that exists in this type of network.

For pump applications, it is most common to use asynchronous and synchronous machines, which are available for the different global voltage levels. Local power networks available to the consumer lie in the low-voltage range between 110 volts and 690 volts. Industrial networks in the medium-voltage range lie between 6,000 volts and 30,000 volts. The power frequencies vary to a lesser extent and are at 50 Hz or 60 Hz.

Energy is harvested by photovoltaic modules generating their own DC power networks for dosing and pumping applications miles from anywhere that lack connections to elec-

tric power supply networks. DC machines with various operating principles are the most common method used here.

The type of three-phase motor most frequently used to drive pumps is the self-cooling asynchronous motor with squirrel cage rotor. This motor does not require wear-prone sliding contacts, is very robust and can be mains operated directly using 3-phase alternating current and even speed-variable by using a frequency inverter. In this setup, the frequency inverter powers the motor with a rotating field of variable frequency and a motor voltage that is adjusted to the frequency.

There are various options for making optimal use of electric motors to operate reciprocating positive displacement pumps in their specific applications.

In addition to metering or flow rate accuracy, the adjustment range of the flow is also an important operating parameter for the operator. These parameters depend significantly on the specific pump and its structural design as well as on the selected drive configuration.

Suitable drive configurations are available for any pump and any application and each configuration has its own benefits and drawbacks.

Constant speed drive (direct line operation)

The metering pump is operated using a standard asynchronous motor directly on the electric power supply network. Using this widespread standard technology constitutes the most cost-effective approach. Here, low levels of commissioning and maintenance effort are to be expected, thanks to the tried-and-tested drive components.

One disadvantage of this drive type is the constant rotation speed, which can only be configured by the number of pole pairs of the motor. This means that stroke adjustment is the only way to vary the metering amount. Due to the slip of the asynchronous drive, however, it is not possible to guarantee precise rotational speed consistency, especially for torque changes caused by fluctuating working pressures. This may result in metering errors and should be taken into account.

Furthermore, it must be considered that, concerning material usage and installation work, motor soft starters are required for larger motors due to their very high starting currents. Direct line operation is normally only permitted for small motors up to about 4 kW.

Variable-speed drive in an open control loop

The drive primarily consists of an asynchronous motor and a frequency inverter, as shown in figure 2.9.

To achieve the flow rate set point, a frequency inverter is used to change the frequency of the rotating field in the stator of the asynchronous motor and thus its motor speed. Parallel to changing the rotating field frequency, the motor voltage must be tracked and changed simultaneously in order to adjust the current draw due to the fact that the stator inductance is dependent on the frequency.

In the **U/f** operating mode of the frequency inverter, the stator voltage **U** is updated linearly to match the stator frequency **f**, whereas vector control mode involves storing a mathematical model of the connected motor to be used as a basis for load-independent rotational speed control with slip compensation.

The feedback of the rotational frequency of the motor by speed sensors in the frequency inverter control process is often not included in the open control loop design.

One advantage, in comparison to the constant speed drive, is the variability of the metered flow and the protection and monitoring functions integrated into the frequency inverter. The control of the metered flow is typically in a turn down ratio of 1:5 to 1:10 and is subject to certain limits in terms of rotational speed accuracy and dynamics. However, since this system is a standard system that sees frequent use, the variable-speed drive in the open control loop is marked by low commissioning and maintenance effort.

Figure 2.9: Variable-speed drive in an open control loop

Variable-speed drive in a closed control loop

The particularly advantageous use of servo drives involves using systems consisting of a synchronous motor with the corresponding power electronics and controller as well as an integrated rotational speed measuring system. Examples of servomotors are shown in figure 2.10.

Returning the motor speed measured in the motor to the internal control of the servo controller results in outstandingly precise motor control and consistency. Another stand-out characteristic here is the very wide adjustment range and the integrated protection and monitoring functions. The very high efficiency goes hand-in-hand with the special servo technology. This level of efficiency is achieved using a compact motor construction without fans. Additional control functionality can be integrated if necessary using expansion modules for the servo controller. The slightly higher investment and commissioning expenses have to be weighed against various additional functions, e.g. implementing remote monitoring and diagnostics functions using integrated web browsers.

Figure 2.10: Variable-speed drive with servomotor

An alternative drive system for the described servo technology for variable-speed operation in a closed control loop might consist of a modified asynchronous motor with a separate encoder for rotational speed measurement (see figure 2.11) as well as a frequency inverter. This combination can also achieve an increase in the adjustment range beyond that of 1:5 to 1:10.

The speed-dependent ventilation power of self-cooling motors unfortunately results in a reduction in cooling power in the lower speed range. This reduction has to be compensated for using a motor with correspondingly larger dimensions. As a result, the motor surface, which is larger in comparison to the power it provides, can dissipate the heat loss created, even at low speeds. The cooling circuits of a self-cooling motor are shown in figure 2.12. Figure 2.15 shows the reduction of the torque for the purpose of protecting the motor from thermal overload in this lower speed range.

Modifying and over-dimensioning the motor results in higher additional expenses in comparison to benefits gained, especially in consideration of the reduced quality of the rotational speed measurement and of the low dynamic range of this system.

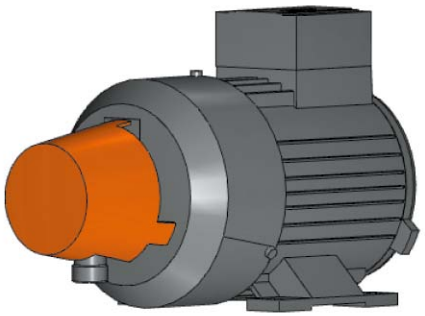

Figure 2.11: Standard asynchronous motor with separate encoder

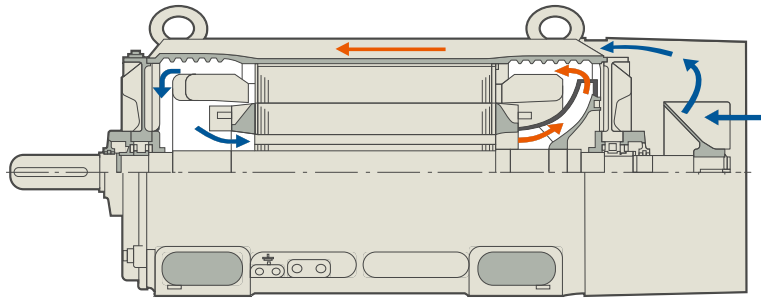

Figure 2.12: Cooling circuits for a self-cooling motor

Motion-controlled drive

Current developments in motion control for drive technology make it possible to generate definable flow rate curves by specifying profiles for the rotation angle speed of the motor shaft.

Contrary to the "natural" flow rate curve that resembles a sinusoidal curve when operating at a constant angular velocity, the chronological sequence of the pump displacer position can be controlled here, which means that the metered flow can be influenced

directly. Thus, new applications in fluid metering are possible (for details, see chapter 4.4 "Control of fluid kinematics").

Unlike other conventional asynchronous machines, these compact, ventilation-free and permanent magnet synchronous servomotors feature particularly low moments of inertia so that they can reach high acceleration and deceleration values. For more information on this, also refer to the previous section, "Variable-speed drive in a closed control loop". Servo drives are therefore perfect for the use in particularly dynamic applications. The word "servo" is derived from the Latin word "servus" which translates as "servant", "slave" or "assistant". In the machine tool industry, servo drives were once predominantly used as auxiliary drives. This has changed. Today, even large-scale main drives are designed to use servo technology.

In addition to plunger position control, it is also possible to implement very precise speed control with a high degree of speed consistency, even for significant load fluctuations in a very wide control range.

Higher-level volume flow control circuits and other process control systems as well as monitoring functions can be implemented using scalable hardware and software modules for drive components.

2.2.3.2 Frequency inverter

The frequency inverter, established in all areas of the machinery engineering and plant construction industry, is a crucial component of the power train and is used for load-independent modification of the motor speed for asynchronous motors in the AC power supply.

Its primary function is to convert electric energy by using switching components of power electronics.

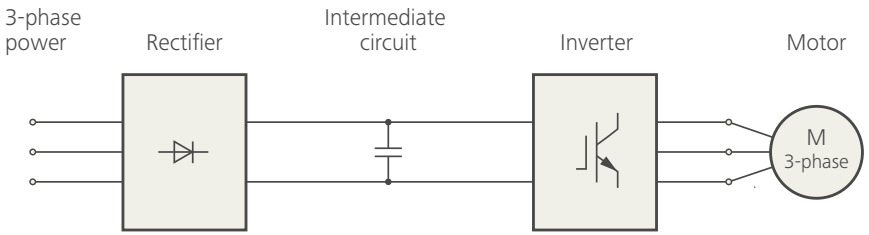

Figure 2.13: Block diagram of a frequency inverter

The frequency inverter depicted in figure 2.13 with a direct current link consists of a rectifier at its input. The rectifier is fed by a three-phase power supply with a constant voltage and constant frequency. This rectifier generates a constant DC voltage, which is also smoothed using intermediate circuit capacitors.

The DC link voltage is divided by the output-side inverter into rectangular voltage blocks of different lengths but equal height using the pulse width modulation. The corresponding phase diagrams are shown in figure 2.14.

Varying the temporal extension of the voltage blocks and pauses allows changes to the effective value of the motor frequency and voltage, and thus the speed of the connected three-phase motor, continuously. Thanks to the high switching speed of the power semiconductors, this process runs virtually without losses.

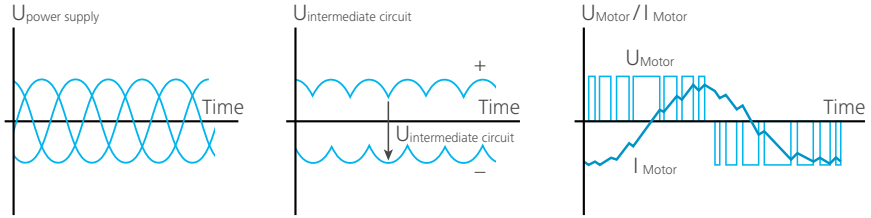

Figure 2.14: Phase diagrams for the pulse inverter

Another advantage of the variable-speed drive is the fact that the inverter constantly puts a load on the supply network with a power factor of $\cos \varphi > 0.95$, independently of the properties of the connected motor. This means that it hardly draws any reactive power that would have to be compensated for through additional measures.

When planning the motor for the variable-speed drive, two particular features must be taken into account that set it apart from the continuous speed drive: the resulting additional power losses, and the voltage increase on the motor windings in the stator, which have to be accounted for by selecting a suitable motor.

Asynchronous motor operation on the frequency inverter can be divided into two operating ranges: constant flux range and the field-weakening range (see figure 2.15).

Constant flux range

As long as voltage U is adjusted proportionally to frequency f, the ratio between the voltage and the frequency remains constant along with the magnetic flux, the usable torque M and the stall torque M_s of the motor.

Field-weakening range

If the frequency is further increased after reaching the maximum possible output voltage of the inverter or the maximum permissible stator voltage of the motor, then the ratio between voltage and frequency decreases along with the magnetic flux in the motor. This range is called the field-weakening range. In the field-weakening range, the usable torque M decreases in relation to the rated torque M_{rated} more or less proportionally to the ratio of the rated rotational frequency to the frequency of the operating point f_{rated}/f. The power P remains constant.

The stall torque in the field-weakening range $M_{s\text{-}reduced}$ decreases in proportion to the stall torque in the constant flux range proportionally to the ratio f_{rated}/f^2.

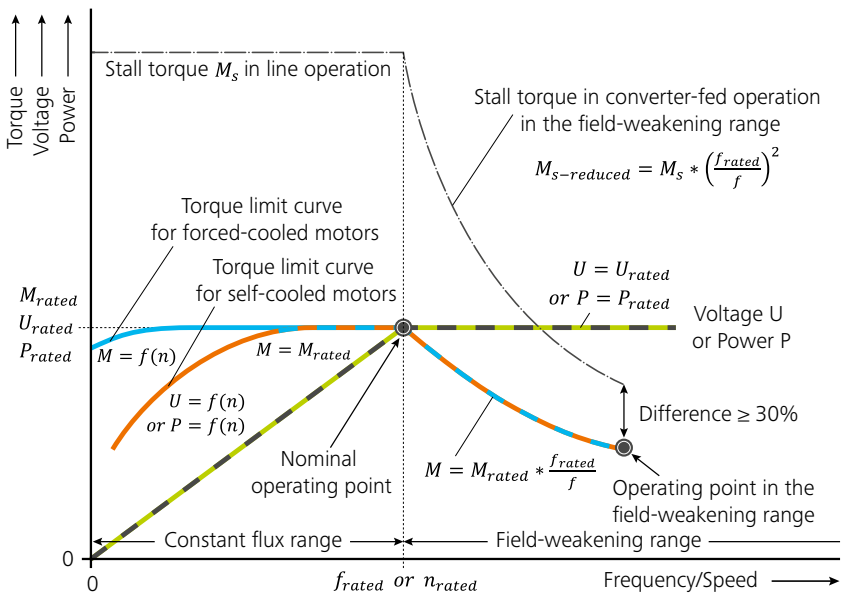

Figure 2.15: Torque curve of a motor with frequency inverter

Figure 2.15 contains various pieces of information, including the speed-torque characteristic curves for asynchronous motors in different operating ranges.

Thermal stress caused by pulse frequencies and motor cables

High pulse frequencies of the power semiconductors, typically in the range of 1 kHz to 8 kHz, and in conjunction with the load inductances of the motor windings, smooth out the resulting motor current. Despite this, however, the non-sinusoidal current curve results in harmonics. The harmonics themselves lead to additional heat losses in the motor, which means they must also be considered when selecting a motor.

While an increase in the adjustable pulse frequency would reduce these losses in the motor, doing so would result in additional switching losses in the power semiconductor of the inverter.

Additional thermal loads in the inverter result from the motor cables.

Due to the geometric arrangement of the individual conductors and the materials used, they have a cable capacitance that increases in proportion to the cable length. Thus, longer motor cables mean non-negligible capacitance levels, especially when shielded motor cables are being used for EMC (Electromagnetic Compatibility) reasons, and multiple motor cables must be laid in parallel for larger drive outputs.

These cable capacitances are reloaded through each switching action of the inverter's power semiconductor. As a result, additional current peaks are superimposed over the actual motor current.

Voltage stress of the motor windings

The fast switching processes of the power semiconductor causes high voltage rate-of-rise at the inverter output with a steepness of dU/dt and with typical values of 3 kV/µs to 6 kV/µs, running along the motor cable toward the motor at a speed of approx. 150 m/µs (≈ half the speed of light).

Because the motor has a considerably higher wave impedance than the motor cable, the voltage spike that reaches the motor coil is reflected and short-term peaks occur in the motor coil. These peaks can take on values up to twice as much as the DC link voltage.

The resulting voltage increases that occur even on relatively short line lengths are reduced significantly when using motor reactors, dU/dt filters or sine-wave filters.

The drive system should be adjusted accordingly, also taking into account the lengths of the motor cables and, where appropriate, the use of suitable filters and the selection of the appropriate pulse frequency.

2.2.3.3 Other motor drives

In rare cases, especially if no electricity supply is available, other motor types are used to drive pumps.

Air motor

Air motors or gas expansion motors are of simple design when considering blade motors or gear motors. They are lightweight, robust and do not require a cooling system. Air motors are used if the only form of energy available at the pump's operating location is compressed air or suitable, pressurized gas, e.g. natural gas. The use of reciprocating air motors is possible for high outputs. However, the efficiency of such gas expansion motors is comparably poor.

Combustion engine

Gasoline, diesel or natural gas-powered combustion engines can be used, depending on the availability of the primary energy, the operating mode in terms of intermittent use or continuous operation, and customer requirements, such as mobile vehicle-mounted use. Clutches or hydraulic converters for connecting motor and pump are used, if necessary.

Hydraulic motor

A rotating hydraulic motor can also be used as a drive, for example, when operating a reciprocating positive displacement pump in combination with mobile hydraulics.

2.2.4 Gear drives

In motorized drives, the gear unit is used to reduce speed and increase torque for the subsequent transformation of rotational motion into reciprocating linear movement.

Basically, it is possible to distinguish between external built-on gear boxes and gear units integrated into the pump drive housing. The use of an external gear unit depends on the manufactured number of pumps within a certain performance class. If the number of pumps is relatively low a more design-intensive integration is not worthwhile but a purchased external gear unit will be, despite the fact that this requires more effort per pump and more space. The external spur gear is preferred if the power to be converted is comparatively high, since it shows less wear and less power loss compared to the worm gear due to its basic design.

External gear units very often are spur gears in their own housing. They are mounted and aligned with the driving motor and the pump drive unit on a base frame and usually connected by shaft couplings.

Internal gears usually are worm gears. While they exhibit slightly poorer efficiency they do offer a large reduction ratio in the range of i=5 to i=50 in one single step and run with very low noise. Due to the relatively large sliding motions in the gear tooth system the worm wheel is made of bronze. This means that worm wheels can be operated continuously for many years even at varying speeds if designed appropriately and lubricated by proper gear oil. Figure 2.16 shows a worm shaft and worm wheel.

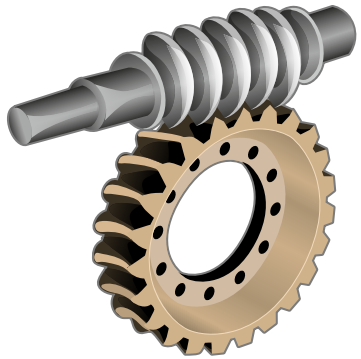

Figure 2.16: Worm shaft and worm wheel

Integrated spur gears, bevel gears, hypoid or crown gears are rare because these have smaller reduction ratios and are relatively expensive with low number of pieces and high outputs.

2.2.5 Drive units

The main function of the drive unit of reciprocating positive displacement pumps is to convert rotational motion into reciprocating linear movement in order to drive the plunger or the diaphragm of the pump head. This relationship is depicted schematically in figure 2.17.

Starting from the rotational motion on the input shaft of the drive unit, there is usually a gear function for raising the torque and lowering the frequency as well as a downstream mechanical system for generating the reciprocating linear movement. Cam gear, cam disk, wobble plate and crank drives are common.

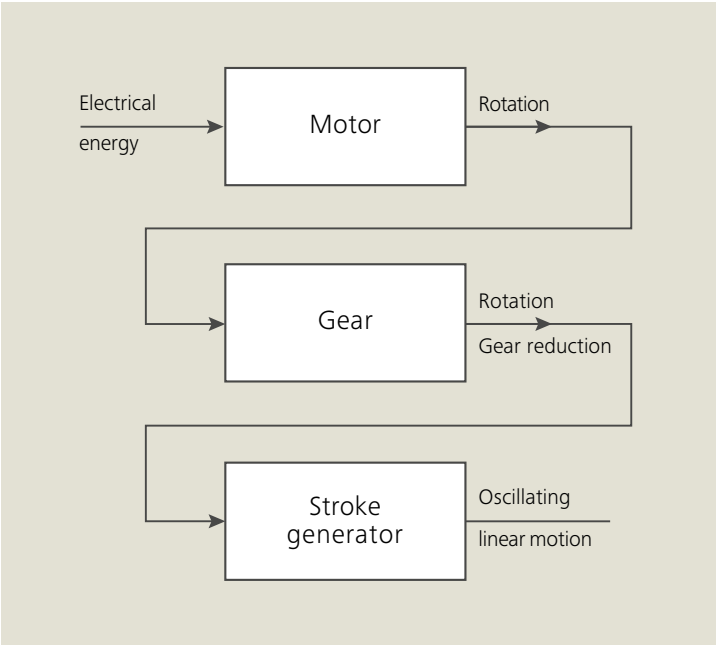

Figure 2.17: Energy transformation diagram

Different solutions are possible depending on the performance class, the cost and the technical requirements.

2.2.5.1 Spring-cam drive units

In order to implement larger plunger drive forces, compared to electric solenoids, a more elaborate mechanical functional principle is required.

Starting from the rotational motion on the input shaft of the drive unit, a worm gear reduces the speed and increases the torque for the cam shaft. An actuating cam sits on the cam shaft and moves a linear moving rod, the plunger rod, perpendicularly to the axis of rotation of the cam shaft. The rod is connected to a spring, which works against the force from the cam drive. The spring holds the cam and rod in contact and ensures the return stroke movement of the rod. Figure 2.18 shows the structure of the spring-cam drive unit schematically.

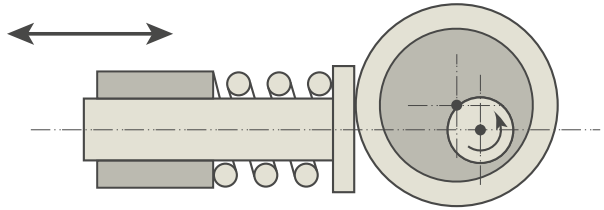

Figure 2.18: Spring-cam drive unit

The linear movement generated by a circular cam is sinusoidal and extremely constant stroke-for-stroke. It works particularly well as drive kinematics for a metering pump.

A stroke length adjustment can easily be implemented for the cam and spring drive in a similar way to that of the stroke solenoid drive. For this purpose, an adjustable, mechanical stop is used, which limits the return stroke movement of the rod. The cam lifts off of the rod and a portion of the stroke is cut off. In the forward stroke movement the cam hits the rod again and takes it along for the partial stroke. Using a threaded screw as the stroke limit enables highly precise adjustment of the stroke length. The stroke function of the spring-cam-drive unit in the full and partial stroke is displayed in figure 2.19.

One advantage of this type of drive design comes from this principle. The front dead center of the stroke movement is constant and independent of the adjusted stroke length and so is the dead space. The consequence of this principle is a constant small dead volume in the associated pump heads which thus can provide more efficient and accurate metering at high discharge pressures.

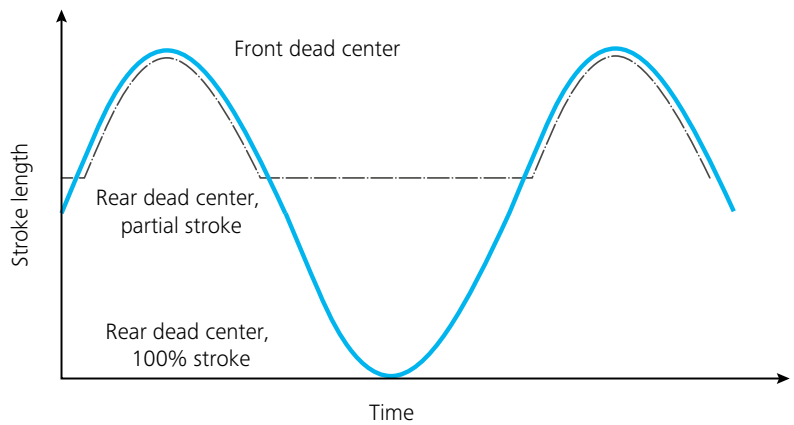

Figure 2.19: Stroke function of the spring-cam-drive unit in the full and partial stroke

Primary advantages:
- Relatively simple mechanical design
- Compact, cost-effective design
- Harmonic movement of the rod at full stroke
- Very precise configuration possible
- Constant front dead center
- Very low dead space
- Linearity between the adjustment path and stroke length

At higher rod forces and high stroke numbers, wear can result at the point of contact between the cam and the rod. This is a limiting factor for the rod force of spring-cam drive units.

An additional limitation is based on the kinematics during partial-stroke operation. When the rod strikes the stroke limit and when the cam contacts the rod again shocks and impacts with high acceleration result that can cause high stress and wear at the points of contact.

Therefore, stroke-adjustable spring-cam drive units are limited to small rod forces and power outputs.

Primary disadvantages:
- Low axial rod forces
- Shock-like kinematics in the partial-stroke range with high accelerations

2.2.5.2 Wobble plate and swash plate drive units

Another type of drive unit uses a plate arranged at an angle to the linear motion axis of the plunger rod. These designs are available both with and without an upstream reduction gearbox.

A wobble plate drive mechanism is a design in which the plate rotates wobbling relative to the housing and the plunger rod axis. The axial portion of the wobbling movement can be used to drive the plunger rod. The plunger rod usually has a sliding shoe that picks up the movement of the wobble plate, see figure 2.20.

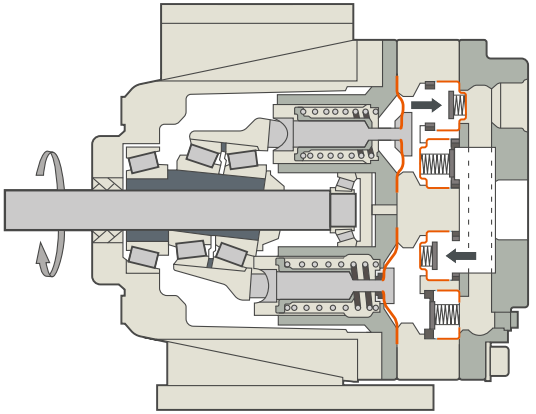

Figure 2.20: Example of a wobble plate diaphragm pump

A swash plate drive unit is a design in which the inclined position of the plate is fixed and the plunger rod moves in a circular orbit in a housing part. Here again, the axial movement is usually picked up from the plate using a sliding shoe, see figure 2.21.

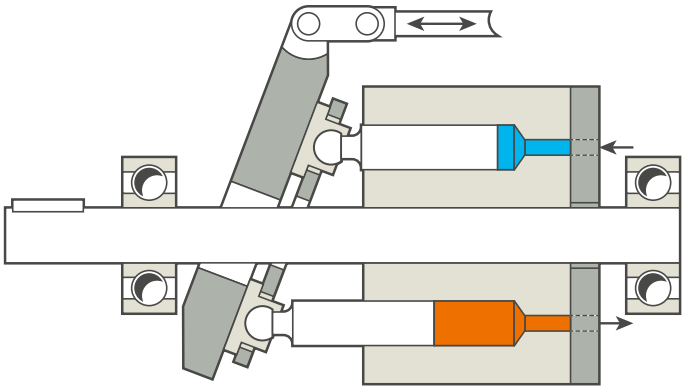

Figure 2.21: Schematic drawing of a swash plate drive unit

A special case of the swash plate drive unit consists of a driven swash plate that circulates instead of wobbling, and drives the plunger rod using a polar coupling rod, as shown in figure 2.22.

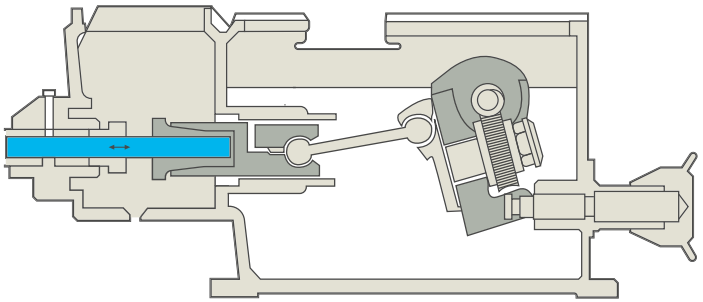

Figure 2.22: Example of a wobble plate drive mechanism with polar coupling

When implementing stroke-adjustable drive units, the wobble plates or swash plates have an adjustable-angle design.

Wobble plate and swash plate drive units can drive multiple plunger rods arranged in a circle simultaneously.

This type of drive unit is not particularly widespread in metering pump engineering. Highly compact, powerful hydraulic pumps can be implemented, but for space reasons, this type is less suitable for implementing a modular diaphragm pump.

2.2.5.3 Crank rocker drive units with adjustable swing arm bearing

Crank-rocker drive units have a crank drive connected to the plunger rod by means of two links and a swing arm. The swing arm is also connected at the connecting point of the links, see figure 2.23. The stroke length is adjusted by changing the position of the pivot point of the swing arm relative to the axis of the linear movement of the plunger rod.

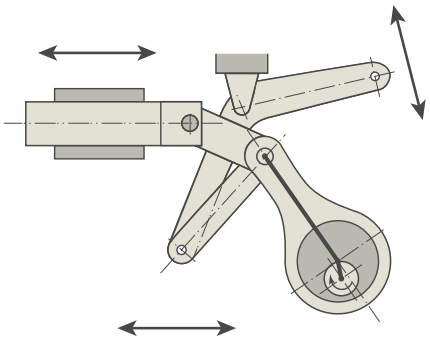

Figure 2.23: Adjustable crank rocker drive unit

The crank rocker drive unit contains many individual components with pivoting, highly loaded bearing points. Therefore, it is complex and relatively expensive to manufacture.

Some stroke-adjustable metering pumps of earlier generations were equipped with crank rocker drive units.

2.2.5.4 Rocker arm drive units with pivot adjustment of the coupling

Rocker arm drive units also include a crank drive. However, it is not connected directly to the plunger rod but acts on the plunger rod via an intermediate rocker arm instead. This arrangement makes it possible to achieve stroke length adjustment for the plunger rod. This function is implemented making the supporting point of the rocker arm shiftable in order to transform the reciprocating movement with varying amplitudes. An adjustable rocker arm drive unit of this type is shown in figure 2.24.

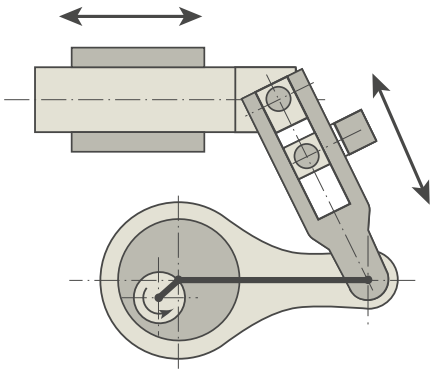

Figure 2.24: Adjustable rocker arm drive unit

The rocker arm drive unit offers a harmonic movement and continuous adjustment and can be designed in a way so that the front dead center remains constant.

The disadvantages of this type of design result from the higher number of joints and highly loaded components resulting from the use of the rocker arm and its pivot point with sliding support.

Earlier generations of stroke-adjustable metering pumps were often equipped with rocker arm drive mechanisms.

2.2.5.5 Cross crank drive units

In order to convert the circulating movement of an eccentric into reciprocating linear movement, two linear guides are arranged perpendicular to the rotating axis, as illustrated in figure 2.25. The arrangement looks like a cross. Designs with yoke and sliding block permit low-wear operation.

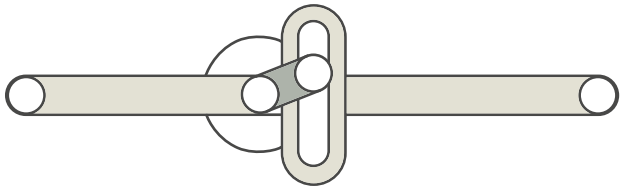

Figure 2.25: Cross crank drive unit

Cross crank drives are used to operate two pump heads with one drive unit, as illustrated in figure 2.26. Like straight crankshaft drive units, they can be equipped with stroke adjustment.

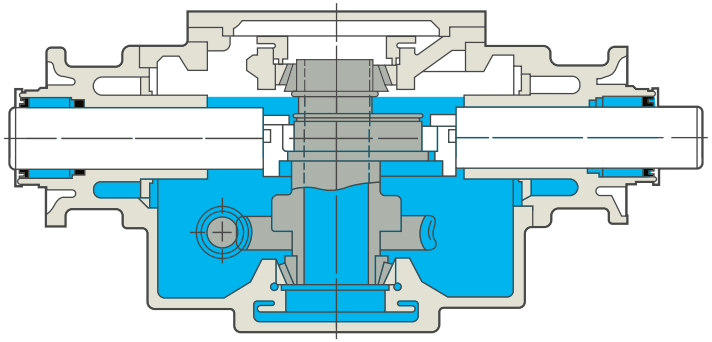

Figure 2.26: Example of a cross crank drive unit

Cross crank drive units are more elaborate in construction than straight crankshaft drive units, since they contain more parts. Some parts need a special design to protect them against wear. Therefore, they usually become cost-effective only when implemented in pumps with two pump heads. The use of a single drive unit for this purpose results in a compact pump that may also have a shared stroke adjustment for both pump heads.

2.2.5.6 Straight crank drive units

The most-used principle for converting rotary motion into linear movement is the straight crankshaft drive, which is frequently referred to simply as a "crank drive". It consists of three basic parts: A crank or crankshaft, a coupling rod or connecting rod and a cross head or plunger rod.

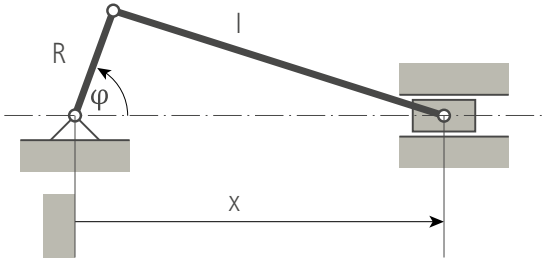

Figure 2.27: Centric crankshaft

The crankshaft has an eccentric area to which the connecting rod is attached. The connecting rod links the eccentric shaft to the cross head, which can move in a linear guide and thus is pushed back and forth by the connecting rod, see diagram in figure 2.27.

This principle results in particularly robust, scalable technical solutions suitable for large-scale force and power transmission. For example, crank drives are operated in power ranges from a few watts to multiple megawatts. Crank shafts with multiple eccentric areas are used to operate multiple plunger rods, and thus pump heads, in an in-line arrangement using one drive unit. Likewise, the plunger rod axes can be located in various planes, making V-type, boxer and star type drives possible. One example arrangement is shown in figure 2.28.

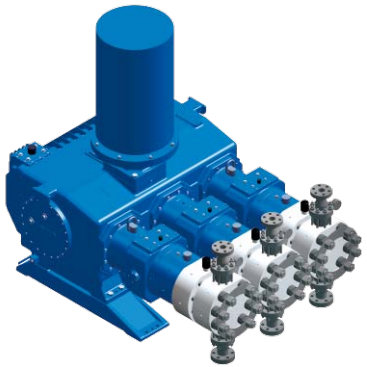

Figure 2.28: Example of multiplex drive unit

Another advantage is the quasi-harmonic movement of the plunger rod without velocity jumps. As a result, the crank drive is highly suitable for reciprocating positive displacement pumps.

Figure 2.29 shows the plunger travel s_p, the plunger velocity v_p and the plunger acceleration a_p. The thrust rod ratio λ is calculated from the eccentricity R, which corresponds to half the stroke length s and the connecting rod length l as follows:

$$\lambda = \frac{R}{l} = \frac{s}{2 * l} \quad (2\text{-}1)$$

The kinematics of the drive unit determines the conveying characteristics of the pump and is decisive for pressure pulsations, the development of which is explained in greater detail in chapter 4.2.2.3 "Fluid mechanics and design of piping".

Plunger travel $s_p(t)$

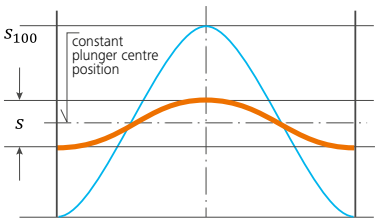

$$s_p = \frac{s}{2}\left(1 - \cos \omega t + \frac{\lambda}{2} * \frac{s}{s_{100}} * sin^2 \omega t\right) \quad (2\text{-}2)$$

Plunger velocity $v_p(t) = \frac{ds_p}{dt}$

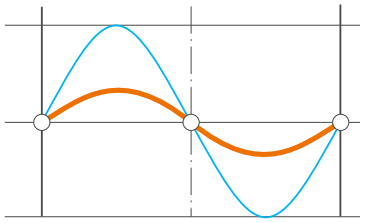

$$v_p = \frac{s * \omega}{2}\left(sin\, \omega t + \frac{\lambda}{2} * \frac{s}{s_{100}} * \sin 2 * \omega t\right) \quad (2\text{-}3)$$

Plunger acceleration $a_p(t) = \frac{dv_p}{dt} = \frac{d^2 s_p}{dt^2}$

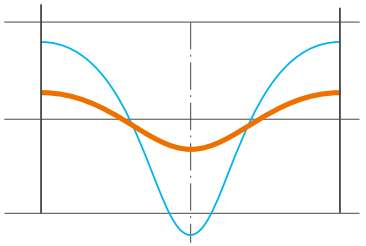

$$a_p = \frac{s * \omega^2}{2}\left(cos\, \omega t + \lambda * \frac{s}{s_{100}} * \cos 2 * \omega t\right) \quad (2\text{-}4)$$

Figure 2.29: Kinematics of the straight crank drive unit

Like most other mechanical drive units for metering pumps, straight crank drive units are operated with an upstream gear for stroke rate reduction and torque increase. Depending on the size of the pump, the gears are integrated into the housing of the crank drive or connected externally to the drive unit.

The crank drive unit can also be equipped with stroke adjustment up to relatively high performance classes.

The crank drive unit can be combined with an eccentric adjustment. This enables the stroke length of the drive unit to be varied, in most cases continuously, while the pump is running. Variable eccentric mechanisms that permit adjustment of the crank arm by moving an eccentric disc have become commonplace. The eccentric disc runs in the big end of the connecting rod and represents the crank pin. One example of possible eccentric adjustments is shown in figure 2.30.

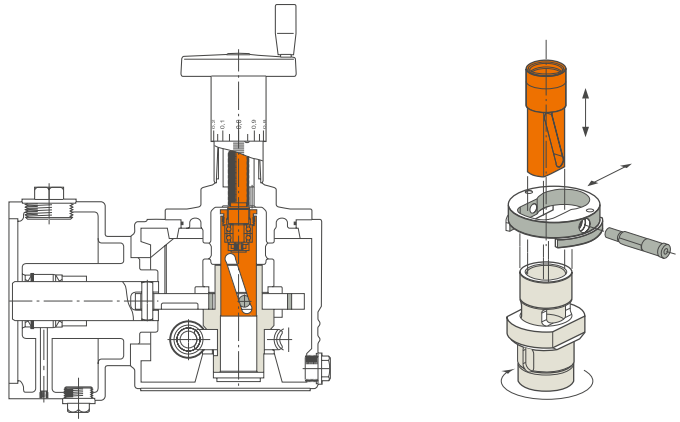

Figure 2.30: Eccentric adjustment

In comparison to other solutions, drive units with eccentric adjustment place stricter requirements on production technology because of necessary high-quality components. However, this is no obstacle nowadays, so the advantages of this design outweigh the disadvantage. Thus, variable eccentric drive units have come out on top, compared to other adjustable stroke drive units, thanks to their compact design, low-backlash and optimized mechanics regarding load-bearing capacity.

Primary advantages:
- Simple, robust, scalable and suited to large-scale force and power transmission
- Compact design
- Quasi-harmonic movement, even at partial stroke
- Variable stroke adjustment, even with relatively high performance classes

Primary disadvantage:
– More parts and higher requirements regarding production technology

2.2.6 Stroke adjustment of the drive units

Some of the drive unit types introduced are capable of providing adjustable stroke lengths, i.e. various amplitudes of reciprocating movement towards the pump head. The process of stroke adjustment is operated in various ways depending on the requirements of the user.

2.2.6.1 Manual stroke adjustment

Stroke adjustment through the direct, manual intervention by operating personnel at the pump on site is the most common standard solution. Depending on the size of the pump and on the mechanical adjustment principle, a certain torque is required for actuation, which is transmitted using turning knobs or hand-wheels with crank handle. Figure 2.31 shows design variants of manual stroke adjustments.

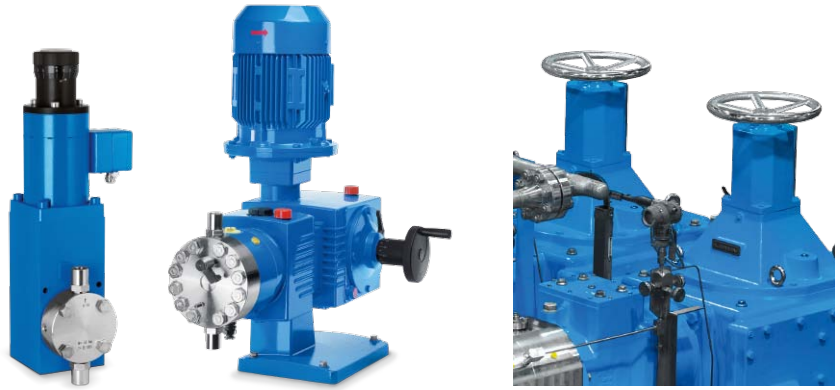

Figure 2.31: Examples of manual stroke adjustments

2.2.6.2 Electric stroke adjustment

The actuation of the stroke length adjustment can also be carried out by an electric actuator. This may be done by using the local controls right on the actuator, but in most cases, is carried out remotely from the control room. This has the significant advantage of being able to automate processes.

To this end, the control room sends a signal to the electric stroke adjustment unit, which adjusts the stroke and also outputs feedback to the control room, creating a closed control loop. One example of a electric stroke adjustment can be seen in figure 2.33.

Technical design

Rotary actuators for electric stroke adjustment can be attuned precisely to each drive unit in collaboration with the manufacturer. These rotary actuators mainly consist of an electric motor, a worm gear, an integrated non-intrusive control unit and a handwheel for emergency operation. The actuators are designed for control operation in the rated operation class S4-25%, i.e. for periodic intermittent duty with effect of the start-up process and a duty cycle (DC) of 25%. The motors are protected from overloading by a PTC (Positive Temperature Coefficient) thermistor.

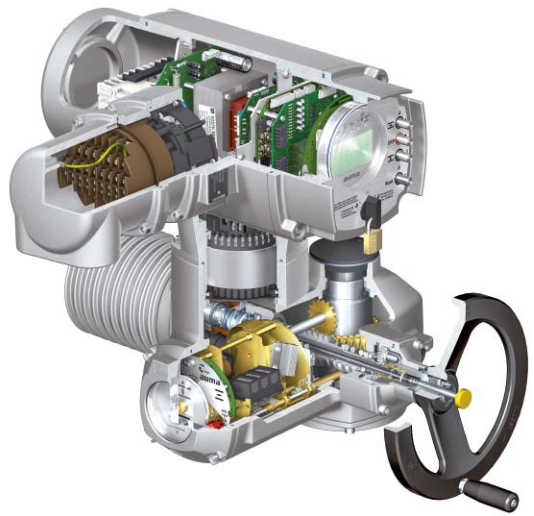

Figure 2.32: Sectional view of an electric actuator (AUMA 2017)

As when selecting the pump drives, both the ambient conditions and customer requirements must be taken into account when selecting the actuator. This primarily includes information about the voltage and frequency, the number of phases (DC or AC current), the desired actuation type, the ambient temperature and information about required explosion protection.

If the pump is operated in the Ex area, explosion-proof actuators must be used that are designed so that they cannot generate ignition sparks or hot surfaces, and thus cannot

be an ignition source. Figure 2.32 shows such an ex-proof electric actuator. All actuators are also dust-proof and protected against both spray water and long-term submersion in water. Use in particularly cold environments (< -20°C) is also possible; however, the installation of a heating unit must be taken into account. In order to ensure that positioning accuracy is as exact as possible, and to protect the actuator from overloading, the actuators are equipped with both position and torque measurement.

Actuation takes place via the integrated control unit. An analog 4 to 20 mA signal is used for this purpose as standard. However, HART Protocol, Foundation Fieldbus, Profibus DP or Modbus RTU can also be used, depending on the design of the pump. In addition, the customer has the option to dispense with the integrated control unit and operate the actuator using a potentiometer with its own external control system.

Figure 2.33: Example of an electric stroke adjustment

2.2.6.3 Pneumatic stroke adjustment

In rare cases, pneumatic stroke actuators are used. Therefore, the adjuster drive is primarily powered by compressed-air while generating torque or thrust for the stroke adjusting action. There are pneumatic actuators that work with air motors and threaded spindles and others that use a shifting piston to generate linear actuation.

In pneumatic actuators the control signal may be available in both the electric as well as pneumatic form via a control pressure level.

The advantage of these actuators is good explosion protection, as electrical drive energy does not have to be brought in nor converted and even the control signal does not necessarily have to be electric.

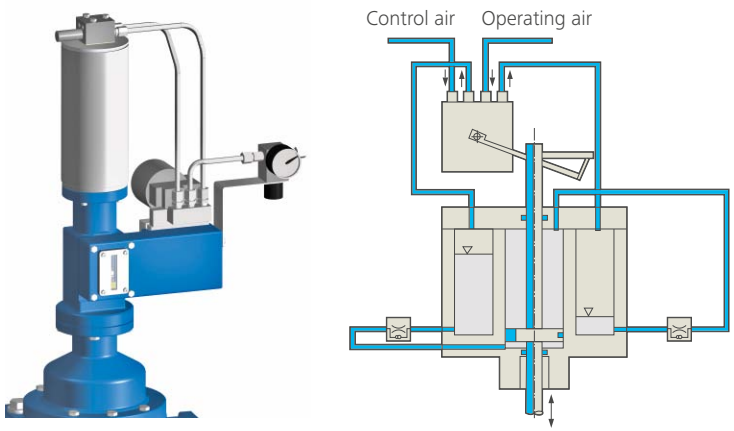

Figure 2.34: Examples of pneumatic stroke adjustments

In figure 2.34, a motoric pneumatic stroke adjustment is illustrated on the left side. The right shows a solution with piston.

2.2.6.4 Stroke length adjustment vs. stroke frequency adjustment

As previously mentioned, in addition to adjustment of the metered flow by changing the stroke length, it is possible to control the stroke frequency with a variable frequency drive (VFD) or to combine both alternatives.

Controlling the metered flow using the stroke frequency with VFD has a higher accuracy than the stroke adjustment by use of an actuator. This is due to the fact that a stroke adjustment has a certain tolerance range and play within which it is at a standstill though being actuated. This ensures judder-free operation of the actuator. In addition, using actuators in multiplex pumps results in high cost and effort since each drive unit has to be equipped with its own actuator and wired individually. Despite these disadvantages, actuators are frequently used in the field since they also offer many advantages in comparison to frequency inverters.

The actuator is a classic solution that is easier to handle due to its installation in the drive unit as an integral component of the pump. As a result, it is not subject to additional specifications unlike the VFD. In environments with explosive atmospheres, a certified actuator is also significantly easier to use than a frequency inverter. Using actuators, the flow rate can be decreased to zero, which is another advantage. In addition, the design of the motors does not have to be coordinated with the actuator, which means that it is not necessary to select a large motor because of losses arising on the frequency inverter. Due to the constant stroke frequency, actuators are particularly suited for metering processes where precise chemical formulations are to be blended.

2.3 Pump head technology

The purpose of the pump head is to convert power from the drive into hydraulic power, which corresponds to an increase in fluid flow and pressure.

A step-by-step approach has proven useful for describing the function of metering pump heads and for understanding the basic mechanisms. Reasons and explanations are given for technical solutions ranging from simple to complex along the "evolutionary line of metering pump heads".

2.3.1 Evolutionary steps

The starting point of this evolution is the simple plunger pump, shown schematically in figure 2.35.

In the case of plunger pump heads, the reciprocating plunger acts directly on the pumped fluid as a displacer. The plunger discharges the fluid out of the pump body and then sucks it back in.

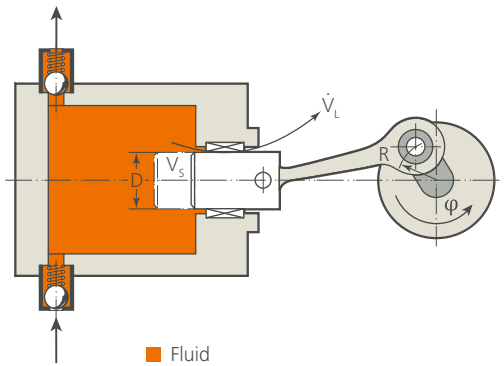

Figure 2.35: Plunger pump

The work cycle of the plunger pump head is illustrated in figure 2.36. The discharge stroke of the plunger begins at the rear dead center (RDC) with the relatively brief compression phase (1-2), since all fluids exhibit compressibility, even if it is generally low. When the fluid is compressed to the discharge pressure, the pressure valve opens. The flow phase then takes place and the fluid is discharged into the discharge line (2-3). After reaching the front dead center (FDC), the decompression phase begins (3-4), followed by the suction phase from the suction line into the pump head (4-1).

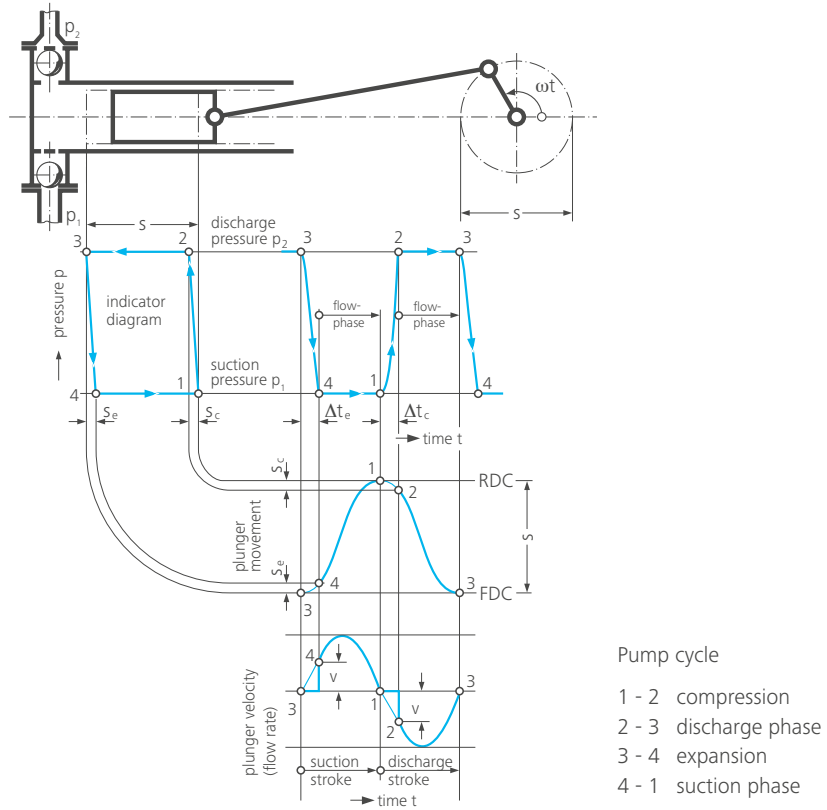

Figure 2.36: Work cycle/pressure course in the pump head

The indicator diagram shows the pressure course in the pump head as a cycle. The pressure course is also depicted over time. The nearly sinusoidal plunger travel between RDC and FDC is also shown in relation to time, as well as the plunger velocity as its derivative. Multiplying the plunger velocity by the constant plunger area yields the flow rate. It is then easy to see that the velocity and the flow rate are equal to zero at the RDC and the FDC and change direction. They reach their maximum values at the crank angle of 90° or 270°.

In the following designs, the functional principle of a plunger pump is examined in more detail.

In order to show why and how the plunger pump was developed into the diaphragm pump, its advantages and disadvantages must be taken into consideration.

Primary advantages of the simple plunger pump:
- Low part count, cost-effective
- High efficiency
- High discharge pressure
- Precise metering
- Simple handling and repairs

Primary disadvantages of the simple plunger pump:
- The plunger seal is wetted and can be damaged by aggressive fluids or solids
- The plunger seal and plunger can experience wear, which leads to contamination and higher maintenance costs
- The plunger and gasket are therefore often very specific and made of expensive materials
- Plunger pumps always leak into their surroundings or the flushing system

The task now is to maintain the advantages of plunger pumps and make design changes to eliminate the disadvantages step by step.

First evolutionary step: Installation of a diaphragm

In principle, a diaphragm pump is no different from a plunger pump with an installed diaphragm separating the pressure chamber into a pumping chamber, the working space, and a hydraulic chamber, as shown in figure 2.37. Here, the diaphragm is a flexible yet statically tight partition. The pressure on both sides of the diaphragm is almost exactly equal during normal operation. Simply put, the diaphragm transfers the plunger stroke from the hydraulic fluid to the pumped fluid.

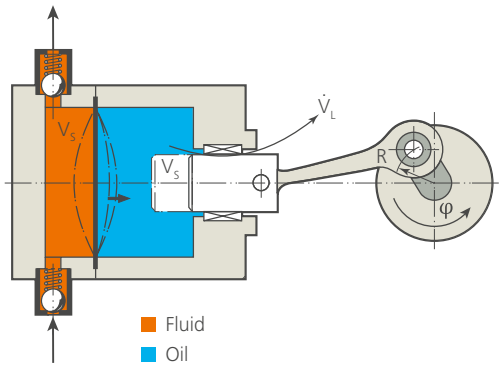

Figure 2.37: Plunger pump with installed diaphragm

This simple step alone substantially improves the design. The simple diaphragm pump now has more advantages compared to the plunger pump. One advantage is that the plunger seal is only in contact with hydraulic oil. This reduces wear, and the pumped fluid is not contaminated by dust from abrasion. The fluid chamber is hermetically tight. Consequently, no pumped fluid leaks into the environment. Furthermore, the pump is absolutely dry-run safe with still high efficiency.

Some disadvantages remain, however; as a result, this simple design is not yet functional. Unavoidable leaked oil at the plunger seal escapes into the environment. Oil leakage causes a reduction in the oil volume in the hydraulic chamber. This is why the diaphragm would then be moved back gradually toward the plunger and finally overstretched.

In the next step, a strategy for catching leakage and preventing damage to the diaphragm due to overstretching must be considered.

Second evolutionary step: Installation of a reservoir, perforated disk and leak replenishing valve

In order to catch leakage occurring at the plunger seal, a collecting container is integrated into the holder between pump head and drive. The oil leakage is collected in this reservoir.

In order to prevent overstretching of the diaphragm in the direction of the hydraulic chamber, a perforated disk is installed that supports the diaphragm. After a corresponding leakage loss, the diaphragm lays on this perforated disk towards the end of the suction stroke. Diaphragm overstretching is thus prevented.

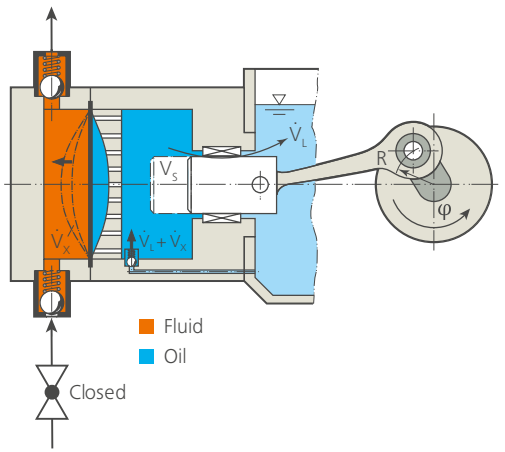

Figure 2.38: Diaphragm pump with perforated disk and reservoir

As the diaphragm would come lay on the perforated disk before the plunger reaches the RDC due to leakage loss, this would lead to a drop in pressure in the hydraulic chamber. This drop in pressure would cause air to be released from the hydraulic oil. The resulting air bubbles are much more compressible than the hydraulic oil itself. Therefore, air bubbles in the hydraulic chamber would cause a significant drop in flow rate due to the extension of the compression phase. A large portion of the plunger stroke would be spent compressing the air bubbles and would no longer be available for transporting fluid. This would result in poor pump efficiency.

The adverse drop in pressure and the resulting formation of air bubbles is prevented by installing a leak replenishing valve. This valve opens at the end of the suction stroke as a function of the pressure in the hydraulic part and allows lost oil volume to be recirculated from the reservoir. In principle, a leak replenishing valve is structured liked a check valve. Most leak replenishing valves are spring-loaded, i.e. they open at a certain pressure level before air is released in the hydraulic part.

The diaphragm pump head shown schematically in figure 2.38 can already function on a long-term basis, provided that no unfavorable operating conditions or fault states occur.

However, the design of the leak replenishing valve can cause problems. If the pressure in the working space drops significantly and too early during the suction phase, this low pressure is transferred over the diaphragm to the hydraulic oil, possibly resulting in the leak replenishing valve opening prematurely. The pressure-controlled leak replenishing valve would then open before the diaphragm has reached the perforated disk at the rear position. Then, the plunger would suck hydraulic oil into the hydraulic chamber instead of pumped fluid into the working space, and the oil volume there would increase. If this happened for multiple stroke cycles in a row, the oil volume would become so great that the diaphragm would shift forward and be overstretched in the forward direction. Because of this, the design is not secure at low suction pressures or with a closed suction line. Suction pressure that is too low, for example, may occur if filters become clogged, if valves are incorrectly closed, if pipe cross-sections are too small or if suction containers are positioned incorrectly. As a whole, this design step has the following advantages and disadvantages:

Primary advantages:
- The reservoir (the oil collecting container) catches the leakage
- The perforated disk prevents the diaphragm from overstretching in the backward direction
- The leak replenishing valve compensates the leakage and prevents outgassing in the oil

Primary disadvantage:
- In case of a closed suction line or low suction pressure, the leak replenishing valve opens too soon. The diaphragm is then pressed forward and overstretched in that direction. This means that the pump is not safe for operation with a closed suction line or low suction pressure.

For the next step, it must be considered how design measures can be used to eliminate the existing disadvantages and make the diaphragm pump safe.

Third evolutionary step:
Installing a front perforated disk and a pressure relief valve

In order to prevent the diaphragm from overstretching in the direction of the working space, a perforated disk is also added there which can be contacted by the diaphragm.

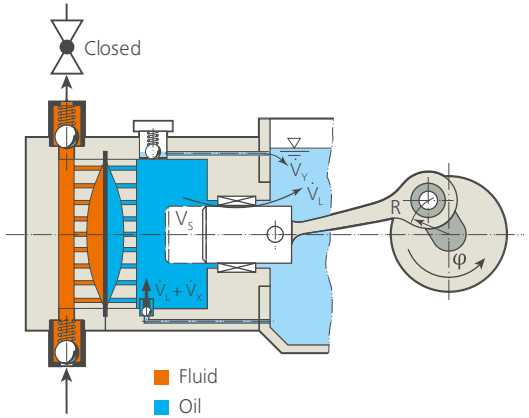

Figure 2.39: Diaphragm pump with perforated disks on both sides and PRV

However, the installation of the front perforated disk alone still does not provide a fail-safe solution. If the diaphragm reaches the front perforated disk before the plunger itself has reached its front dead center due to poor suction conditions and subsequent excess oil volume in the hydraulic chamber, the diaphragm would be pressed against the disk with a high force. This would then cause a significant pressure increase in the hydraulic chamber. The pressure could become high enough to damage the pump. The drive could be damaged due to high forces and torques, along with the housing parts, screwed fittings and seals on the head. The diaphragm itself could also be pressed into the holes of the perforated disk and be punctured.

In order to prevent damage due to impermissibly high hydraulic pressure, a pressure relief valve (PRV) is installed on the hydraulic side. If the pressure increases above the set level, this valve opens and lets hydraulic oil return into the reservoir. As a result, the hydraulic pressure does not continue to increase. Depending on the design of the pressure relief valve, the pressure drops significantly after activation of the PRV.

This step provides a fail-safe diaphragm pump design, as seen in figure 2.39. It is safe in case of poor suction conditions, a closed suction line and a closed discharge line or impermissibly high operating pressure. The pressure relief valve also protects the diaphragm from being damaged at the front perforated disk.

This point clearly illustrates that the perforated disks have to fulfill certain requirements in the working space. The hole diameters must be designed so that the diaphragm is not pressed into the perforated disks and then damaged if pressed with the maximum possible pressure. This maximum pressure corresponds to the set pressure of the PRV, which is greater than the maximum discharge pressure required for the application.

The higher this pressure is, the smaller the selected hole diameters must be. The diaphragm material and the operating temperature also influence the permitted hole size. For example, the pressure limit for a PTFE diaphragm that is 1 mm thick at a temperature of 80°C and a hole diameter of 2 mm is at 80 bar. At the same time, the sum of the hole cross-sections in the perforated disks must be large enough to let the pumped fluid flow unimpeded, and to avoid an adverse drop in pressure during the suction phase. This results in a disadvantage for the perforated disks in so far that, if many small holes need to be produced, the manufacturing costs increase.

Another disadvantage of this technology is that perforated disks with relatively small hole diameters can become clogged with particles, fibers or dirt contained in the pumped fluid.

The described advantages and disadvantages are summarized as follows:

Primary advantages:
- The front perforated disk prevents the diaphragm from overstretching into the working chamber
- The pressure relief valve prevents excessive pressure buildup and protects the pump
- The pump is now safe in case of a closed suction or discharge line

Primary disadvantages:
- The hole diameter in the perforated disk limits the maximum permitted pressure
- With small hole diameters, the perforated disk may become clogged
- The higher the required maximum discharge pressure, the smaller the permitted hole diameters and the more expensive the perforated disks become

The principle at play in this step is used frequently for the design and implementation of diaphragm pump heads. Metal diaphragm pump heads, in particular, are produced with two perforated disks according to this concept.

However, this raises the question of whether the perforated disks can actually be eliminated in order to get rid of the remaining disadvantages. Hence, other design solutions have been sought, meaning further progress for at least certain application areas.

Fourth evolutionary step:
New design: hydraulic diaphragm pump head with control push rod

The goal is to eliminate the perforated disks. To do so, a control push rod is integrated that controls the moment of leak replenishment depending on diaphragm position. Together with the housing, the control push rod forms a gate valve that is actuated directly by the diaphragm. As long as the control push rod is not pressed, it closes the connection to the leak replenishing valve. This evolutionary step is shown in figure 2.40.

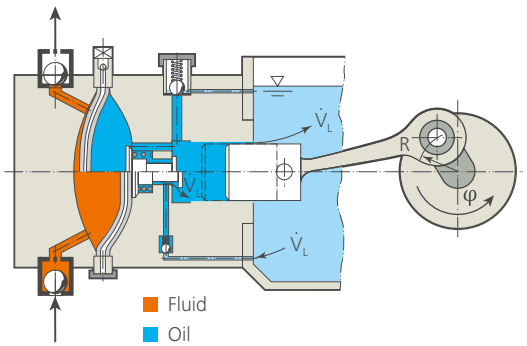

Figure 2.40: Installing a control push rod in the diaphragm pump

It is only possible to open the leak replenishing valve once the diaphragm reaches its rear position at the end of the suction stroke, presses the control push rod and thus exposes the leak replenishing hole. This prevents leak replenishment from happening too early. When the diaphragm leaves the rear contact surface at the beginning of the discharge stroke, the control push rod closes again. This ensures that the correct oil quantity remains in the hydraulic chamber, and that the diaphragm starts from the rear contact surface and remains within the ideal movement range. Thus, the front, fluid-side perforated disk can be omitted from this design.

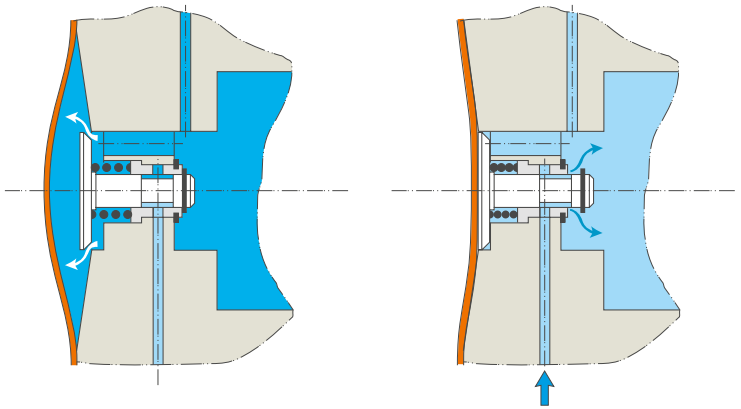

Figure 2.41: Control push rod in different work phases

The plate-shaped area of the control push rod fulfills additional functions in combination with the housing. While the diaphragm is moving between the hydraulic chamber and working space, the control push rod moves forward and allows the oil to flow between plunger and diaphragm without significant pressure losses. When the diaphragm comes into contact with the housing at the rear, it pushes the control push rod into the housing. The pusher plate and the housing form an uninterrupted contact surface that the diaphragm can lay on to without risk of damage. This is especially important in operations with high suction pressures. The different work phases of the control push rod are shown in detail in figure 2.41.

Integrating the control push rod creates a safe, optimized diaphragm pump design with the following advantages and disadvantages:

Primary advantages:
- The control push rod replaces both perforated disks
- The diaphragm always remains in the correct movement range during operation
- Manufacturing costs are lower
- Pressure losses due to flow through the perforated disks are prevented
- Small hole clogging is eliminated on the front perforated disk

Primary disadvantages:
- At a standstill, and in case of fluid-side subatmospheric pressure, the diaphragm may gradually shift uncontrolledly due to leakage from the plunger seal. If it drifts too far into the working space, it can be damaged when the pump starts.

This disadvantage can be eliminated by a specific startup procedure or diaphragm positioning system.

In case of a long-lasting fluid-side subatmospheric pressure while the pump is at a standstill, the diaphragm can drift forward in the direction of the working space due to the ingress of hydraulic oil along the plunger seal. This poses the risk of the diaphragm becoming overstretched when the pump is switched on, if too much oil has seeped into the hydraulic chamber and the plunger starts near the RDC. There are various possible solutions to enable safe pump startup.

As part of a startup procedure, it is possible to apply back pressure on the suction side before starting the pump and to let excess oil flow back into the reservoir manually using an overhead hydraulic valve.

An automated diaphragm positioning system can also ensure the return flow of excess oil into the reservoir using electrically or pneumatically driven valves on the pump heads. This is recommended for larger pumps and for multiplex pumps with multiple pump heads.

The challenge for further development of the diaphragm pump heads is in eliminating the design-based disadvantage of possible diaphragm shift at a standstill, without expensive measures.

Fifth evolutionary step:
New design: hydraulic diaphragm pump head with diaphragm spring

One good option for building a hydraulic diaphragm pump head that is both simple and operationally safe is the diaphragm spring design, shown in figure 2.42. Here, for example, a coil spring is attached to the diaphragm that generates a pressure difference between the hydraulic chamber and working space through its own force.

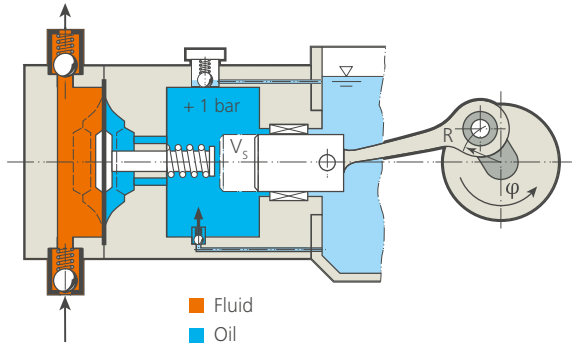

Figure 2.42: Installation of a diaphragm spring in the diaphragm pump

Since the spring force of the pre-loaded spring is also active at a pump standstill, the diaphragm itself remains in its rear position, even if a low pressure level (below atmospheric pressure) forms in the working space simultaneously.

Spring force can also replace the control push rod and the perforated disks by ensuring the correct working range of the diaphragm. This is achieved because the spring force ensures a positive pressure difference in the hydraulic chamber relative to the working space, except when the diaphragm is at the rear contact surface of the housing. The leak replenishing valve, implemented as a check valve as usual, only opens if this excess pressure drops, i.e. when the diaphragm is on the contact surface at the back. This ensures that the right quantity of oil is added at the right time, and that the diaphragm always begins its movement from the back.

Another good feature in a pump head with diaphragm spring is improved suction capacity. This is because the pressure elevation in the hydraulic chamber prevents outgassing of dissolved air from the oil.

In summary, this diaphragm pump head with diaphragm spring has the following advantages and disadvantages:

Primary advantages:
- Safe diaphragm position at a standstill, no startup problems
- Cost-efficient implementation without perforated disks or control push rod
- Pump is safe in the event of a closed suction or discharge line
- Improved suction capacity due to pressure elevation in the hydraulic chamber

Primary disadvantages:
- The design with diaphragm spring is difficult to use at very high pressures due to greater dead space

The most important fundamental concepts of hydraulic diaphragm pump heads and their functions have now been introduced. Modifications and combinations of these basic concepts are found in practice depending on requirements or manufacturer. More information on this can be found in chapter 2.4 "Design examples of different pump heads", where real-world design examples are presented.

2.3.2 Hydraulic valves

Different functions implemented in individual assemblies or function units are needed to ensure safe operation and metering accuracy for a hydraulic diaphragm pump head. Various hydraulic valves as well as diaphragm monitoring are the most important of these to mention.

- Vent valve/gas removal valve
- Leak replenishing valve/snifting valve
- Pressure relief valve
- Diaphragm monitoring

These are covered below.

Hydraulic valves are sometimes referred to by different names from one manufacturer to another, and as a result no standardized names can be found among them. The following selection lists some typical valves, along with their names and design:

Pressure relief valve

The purpose of hydraulic pressure relief valves is to limit the discharge pressure of the active pump to the permitted value. To do so, the valve lets the hydraulic oil escape out of the hydraulic chamber and into the reservoir upon reaching a certain pressure level. As a result, the displacer can no longer cause another pressure increase.

Most hydraulic pressure relief valves integrated into the pump head are used primarily to protect the pump head and drive unit and not to protect the system in which the pump is being operated. Without pressure limitation, if the permitted discharge pressure is exceeded, this would result in leaks at the pump head, damage to components or overloading of the drive. In principle, pressure relief valves are designed so that the entire stroke volume of the pump head can be discharged without causing additional, impermissible pressure increases.

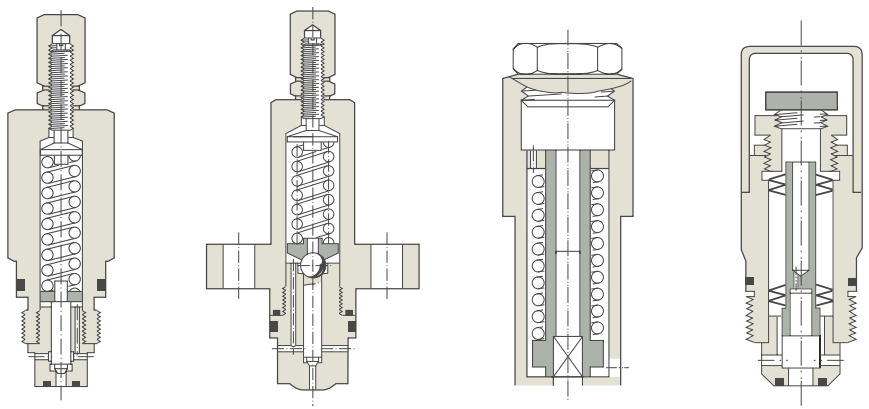

Figure 2.43: Different designs of pressure relief valves

Pressure relief valves are available in different designs, both with regard to their response behavior as well as their constructive design. A few designs are shown in figure 2.43. During flow, pressure relief valves may exhibit a proportional characteristic with respect to the ratio of flow rate to pressure difference, or what is called a high-stroke characteristic, which entails a significant drop in pressure difference after activation.

Depending on the application, pressure range and seal technology used, pressure relief valves can be screwed in, flange-mounted or integrated into the housing. Combinations with other hydraulic valve functions may also be implemented in a housing or assembly.

Leak replenishing valve

This valve type is often called a "snifting valve".

At the end of the suction stroke, the leak replenishing valve allows the oil volume lost during the work cycle due to leakage to be recirculated from the reservoir. In principle, a leak replenishing valve is structured like a check valve. This valve opens depending on the pressure in the hydraulic part. It is opened due to the pressure difference between the reservoir and hydraulic chamber. Most leak replenishing valves are spring-loaded, i.e. they open at a certain pressure difference to the reservoir before air is released from the oil in the hydraulic part. Different leak replenishing valve designs are shown in figure 2.44.

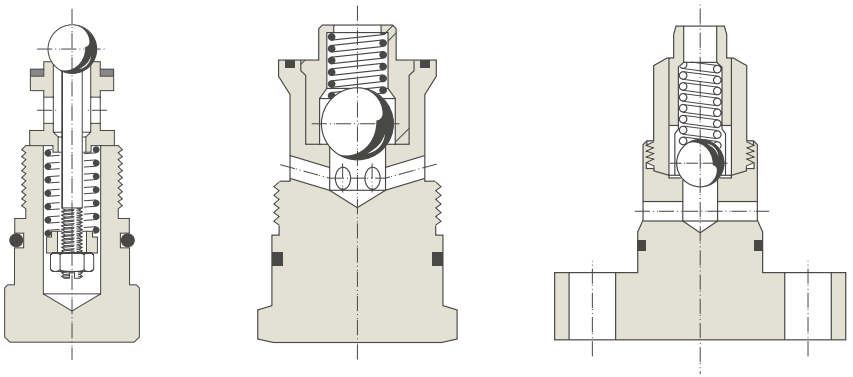

Figure 2.44: Leak replenishing valves; adjustable, screw-in, flange-mounted

Regarding the use and design of leak replenishing valves, another function can also be implemented, which relates to the fault state during a pressure relief valve activation.

If the pressure relief valve opens, it causes oil circulation in the pump, since the oil fed back into the reservoir here is recycled by the leak replenishing valve. During circulation, the mechanical output from the drive is converted into heat that is first absorbed by the hydraulic oil. The more oil that is circulated in this way and the higher the pressure difference during the opening phase of the PRV in this circuit, the more quickly the oil temperature increases. Especially in the case of high-power pumps, this can lead to overheating and the decomposition of the oil as well as damage to the seals.

In order to limit the energy input and temperature increase, the nominal size of the leak replenishing valve is chosen to be significantly smaller than the fluid-side suction valve. This means that the pressure loss in the leak replenishing valve during leak replenishment becomes relatively large if larger oil volumes are circulated. Oil is stored at atmospheric pressure in the reservoir. Consequently, the pressure at the leak replenishing valve falls significantly below atmospheric levels and a portion of dissolved air forms gas bubbles. Under normal conditions, mineral oil contains a high portion of trapped air. Gas bubbles in the oil reduce the amount of circulating oil due to their high compressibility. Finally, the dissipated power and the temperature increase are reduced as a result.

Gas removal valve

This valve, also called a vent valve or degassing valve, removes gas bubbles from the hydraulic chamber.

In many hydraulic diaphragm pumps, the hydraulic circuit has to be vented continuously because new gas bubbles are constantly released from the hydraulic oil due pressure changes and flow. To maintain the delivery rate and metering accuracy, these gas bubbles have to be removed from the hydraulic chamber quickly and safely.

After resolving fault states, such as a blocked suction line or a pressure relief valve activation, gas bubbles may also still be present in the hydraulic chamber. After the fault state, the metering pump should resume running as soon as possible with full power and metering accuracy. To do so, the hydraulic oil must quickly be made bubble-free again.

Compared to releasing the air, it takes considerably longer for the air to become dissolved in the oil again. In order to accelerate the degassing process, many hydraulic diaphragm pumps have a degassing valve. This valve removes gas bubbles from the hydraulic chamber by diverting a steady removal volume into the reservoir at the beginning of each discharge stroke. This removal volume is small when compared to the stroke volume. The gas removal valve is positioned at a point in the hydraulic chamber where gas bubbles have the potential to collect. This allows it to deliver an air/oil mixture, or just oil, thus venting the pump head.

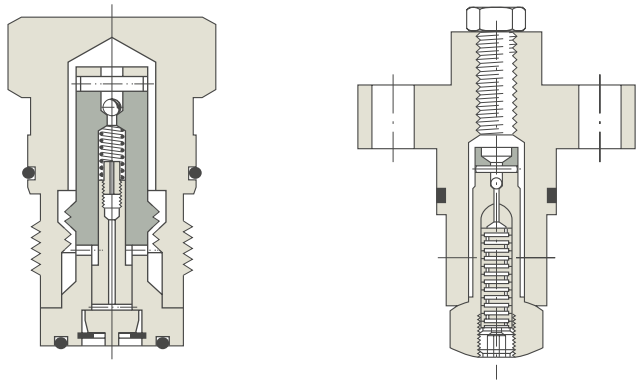

Figure 2.45: Vent valves; left: volumetric, right: continuous

In figure 2.45 the left shows a gas removal valve with a moving removal plunger. There are also solutions with balls and a double seat. The right image shows a gas removal valve with continuous removal by a cascade throttle.

Removing equal volumes with each stroke cycle has advantages in terms of metering accuracy, but is more expensive due to the increased complexity of the valves. Continuous removal is easier, more robust and more cost-efficient in terms of design, but has disadvantages regarding metering accuracy due to its pressure dependency.

2.4 Design examples of different pump heads

In the chapter 2.3.1 "Evolutionary steps" the basic technical reasons and functional principles were explained step-by-step to ensure an understanding of the hydraulic diaphragm pump heads. However, in that chapter, strengths and weaknesses of certain concepts are described only qualitatively. The following chapter includes representations of actual designs based on these essential concepts. These individual designs or pump head series are used to meet specific requirements in certain areas of application and exhibit specific performance features. These designs are covered here to serve as orientation in the diverse world of plunger and diaphragm pumps.

A single pump head concept cannot cover the entire flow rate range, the entire pressure range or all the different fluids that need to be pumped. This necessitates a strong reliance on different pump head designs and models.

2.4.1 Plunger pump heads

The plunger pump head is the simplest and one of the most widely used pump head types. An example is shown in figure 2.46. The pumped fluid is displaced by the plunger directly, i.e. plunger and dynamic plunger seal are wetted. Without special measures, a plunger pump head always leaks. Noncritical fluids can be pumped without additional effort. In case of critical fluids, the pumps must be equipped with collection trays for the leaked fluid. The leakage is sometimes collected after the primary seal by a secondary seal and fed back into the suction line. Very critical fluids must be collected by a flushing system. In some cases, the direction of the leakage through the primary plunger seal can be reversed using a barrier fluid. This can be done by bringing the barrier fluid to a higher pressure than the discharge pressure and conveying it to the side of the primary seal facing away from the working space. Most of these solutions require a secondary seal that seals off the leakage fluid, the flushing liquid or the barrier fluid from the environment is.

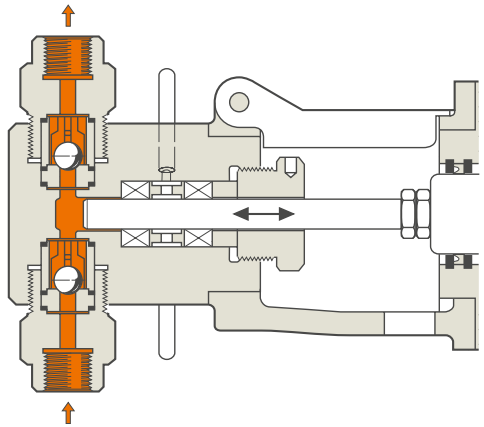

Figure 2.46: Plunger pump head

High-quality plunger materials and sealing designs have to be used for non-lubricating fluids, abrasive slurries, high temperatures and high pressures in order to achieve a good service life, an acceptable leakage rate and high operational safety.

In many of these cases, the effort and cost of safely operating and maintaining a plunger pump increases to such an extent that the use of a more expensive diaphragm pump may pay off when life cycle costs are taken into account.

In summary, simple plunger pumps have the following advantages and disadvantages:

Primary advantages:
- Cost-effective, thanks to low part count
- Good efficiency, thanks to low dead space
- High discharge pressure up to several thousand bars, thanks to low dead space
- Precise metering due to low dead space and few influencing factors
- Easy to handle and repair thanks to low part count

Primary disadvantages:
- The plunger seal is wetted, resulting in high wear and possible contamination
- Expensive materials for plunger and gasket
- Leakage to the environment or to the flushing system
- Special solutions for critical fluids are complex and expensive (collection, flushing, barrier systems)
- Pressure relief valve is not easy to integrate

2.4.2 Directly driven diaphragm pump heads

The simplest and most cost-efficient way of taking advantage of a diaphragm pump head is offered by pumps with diaphragms that have direct mechanical drive or pneumatic drive.

2.4.2.1 Air-operated diaphragm pumps

Pneumatically driven diaphragm pumps are usually designed as double-diaphragm pumps. Both working spaces, the drive chambers for compressed air and the mechanically connected diaphragms are positioned opposite each other. A reversing valve is coupled to the mechanical connection. The reversing valve directs the compressed air into the drive chambers in an alternating way switching over at the dead centers. This way, the compressed air moves the diaphragm pair back and forth, resulting in alternating sucking and discharging. The functional diagram for an air-operated double-diaphragm pump can be seen in figure 2.47.

This pump is cost-effective, requires nothing more than compressed air as drive energy and is suitable as a transfer pump. On the other hand, it is equally unsuitable for both high pressures and precise metering pump applications. This is because the maximum discharge pressure is limited by the air pressure supply, and because the high compressibility of the air creates a high dependency of the flow rate on the discharge pressure.

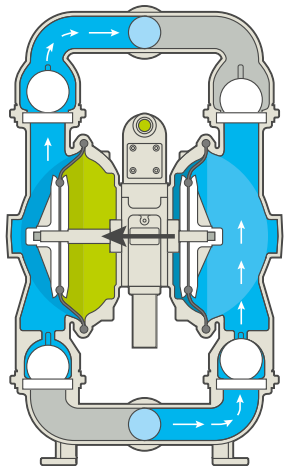

Figure 2.47: Functional diagram of an air-operated double-diaphragm pump

2.4.2.2 Mechanically driven diaphragm pump heads

When mechanically driven diaphragms are used, a rod guides the stroke movement from the drive through permanently attached diaphragm holders to the flexible diaphragm, see diagram in figure 2.48. The diaphragm combines with the pump body and the diaphragm holder to form the working space.

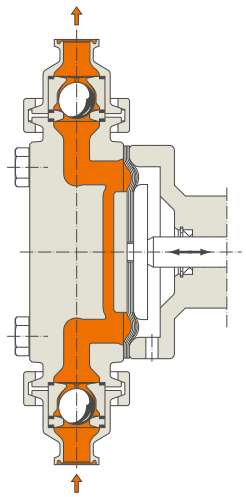

Figure 2.48: Mechanically-driven diaphragm

A major advantage is the absence of the hydraulic part and all of its components.

Unlike pneumatically or hydraulically driven diaphragms, the flexible part of this diaphragm does not get full-surface support due to the fact that the side facing away from the working space is exposed to atmospheric pressure levels. Thus, certain areas of the diaphragm bear the entire pressure differential between discharge pressure and atmospheric pressure.

This makes the function and sealing of the pump dependent on the strength and long-term stability of the diaphragm, which is under high mechanical stress. The diaphragms of these pumps are often designed to have multiple layers in order to increase stability and implement diaphragm monitoring.

Typical operation limits for this type of directly driven diaphragm pumps:
- Pressures up to 20 bar
- Temperatures up to 80°C
- Flow rates up to 2 m^3/h

Primary advantages:
- Cost-effective, thanks to low part count
- Robust, easy to handle and easy repair, thanks to low part count
- No hydraulic components, no hydraulic oil
- Well suited for food-grade, pharmaceutical, medical technology and biotechnology applications

Primary disadvantages:
- Limited pressure range
- Limited temperature range
- Pressure relief valve is not easy to integrate
- No rigid pressure characteristic curve

2.4.3 Hydraulically driven diaphragm pump heads

Hydraulic diaphragm pump heads are used to exceed the pressure and temperature limitations of directly driven diaphragm pump heads.

The basic advantage of the hydraulic diaphragm drive is the mechanical relief of the diaphragm, which is embedded between the pump and the hydraulic fluid and thus only needs to bear low pressure differences and small mechanical stresses.

The first step towards handling higher pressures and temperatures is the use of plastic diaphragm pumps with highly flexible diaphragm designs made of elastomers or thermoplastics.

More stringent requirements due to extreme operating conditions, such as high pressures, high temperatures, special fluids or even radioactivity, call for hydraulic metal diaphragm pump heads. Naturally, the higher strength and density of the metal diaphragm has advantages here.

2.4.3.1 Hydraulically driven polymer diaphragm pump heads

Diaphragm materials that are as chemically inert as possible, such as fluororubber (FKM) or polytetrafluoroethylene (PTFE), are used for building these pump heads. The high flexibility of the diaphragm makes it possible to implement a comparably large diaphragm movement and thus a large stroke volume with respect to the diaphragm diameter. As a result the pump head design remains relatively small with regard to the stroke volume, and costs remain low.

Polymer diaphragm pump heads contain a simple free-moving diaphragm between two perforated disks with leak replenishing controlled by pressure or by a control push rod, as described in chapter 2.3.1 "Evolutionary steps" and shown in figure 2.49.

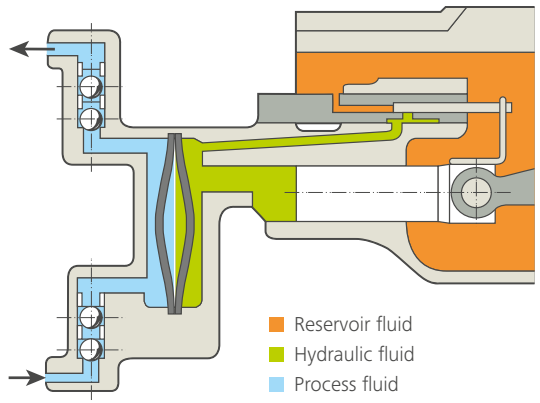

Figure 2.49: Plastic diaphragm between perforated disks

Another representative example of this plastic diaphragm pump head can be seen in figure 2.50. The diaphragm can move freely in the working space and the diaphragm position is controlled by a control push rod.

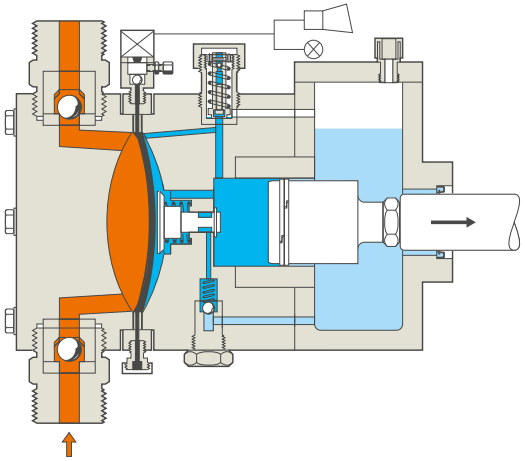

Figure 2.50: Sandwich plastic diaphragm with control push rod

Designs are also implemented with a permanently attached control push rod for controlling the hydraulic oil level and thus the diaphragm positioning. See figure 2.51 for a representation.

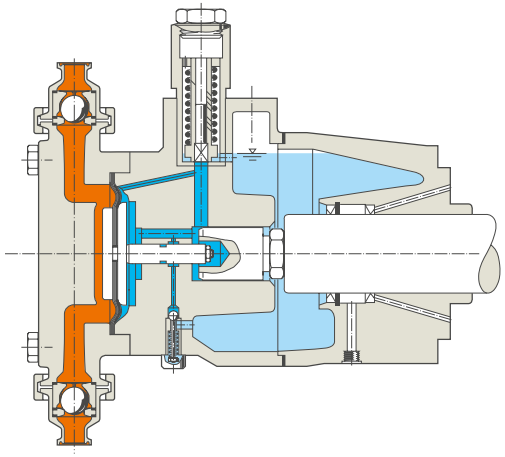

Figure 2.51: Diaphragm with permanently attached control push rod

There are diaphragm pump heads that can operate reliably without the control push rod function. These heads are able to apply a properly measured amount of force to the diaphragm, solving several problems at once as described in chapter 2.3.1 "Evolutionary steps". An example of this is the pump head with diaphragm spring in figure 2.52.

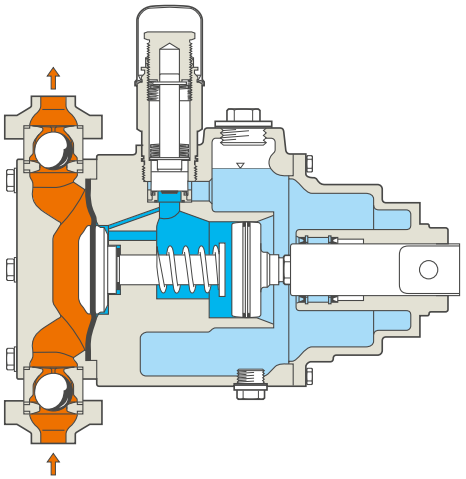

Figure 2.52: Sandwich plastic diaphragm with diaphragm spring

Typical operating limits for these elastomer and PTFE diaphragm pumps:
- Pressures up to 400 bar
- Temperatures up to 150°C
- Flow rates up to 800 m^3/h

Primary advantages:
- Safe and environmentally friendly, thanks to hermetic tightness
- Reliable in operation, pressure limitation easy to integrate hydraulically
- Very high metering accuracy
- High flow rates possible
- Slurry pumping possible
- Contamination-free pumping possible
- Very flexible thanks to selection options for material, surface and hydraulic fluid

Primary disadvantages:
- Increased efforts in comparison to directly driven diaphragm and plunger pumps
- Limited temperature range
- Limited discharge pressure
- Permeation through the diaphragm possible when pumping liquefied gas

New design and construction methods are being used to overcome hampering limitations. Special plastic diaphragm pump heads make it possible to raise the discharge pressure limit to considerably more than 400 bar. It must be considered that the effort for design, testing and construction increases significantly along with the required pressure level.

Special effort must be made to minimize the volume occupied by the hydraulic fluid and by the pumped fluid in high-pressure pump heads. This is because the volume change of these is lost during the alternation between high and low pressure when flow is generated. These volumes are referred to as "dead spaces" or "dead volumes". This loss is a major factor at pressure levels of several hundred bar.

Another primary requirement is absolute tightness for the pump head to the environment despite the use of relatively low-strength plastic. The example of a PTFE diaphragm pump head for pressures up to approx. 800 bar is shown in figure 2.53. Knowledge of the stress and strain conditions in the relevant components makes it possible to seal high pressures permanently using plastic diaphragms.

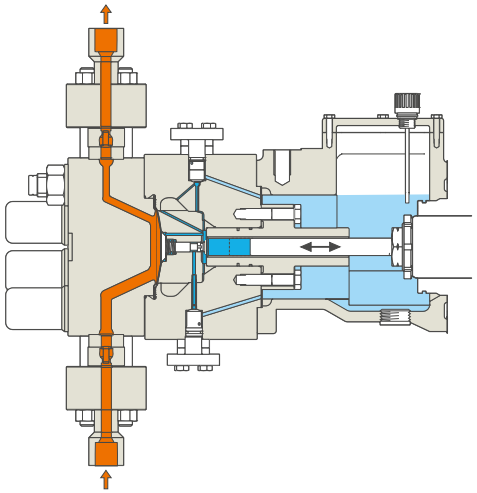

Figure 2.53: Special diaphragm clamping and small working space for high pressures

2.4.3.2 Hydraulically driven metal diaphragm pump heads

If the requirements continue to become more stringent due to special operating conditions or special fluids, the next step is to use hydraulic metal diaphragm pump heads.

This is where the metal diaphragm can display the advantages it has over polymer diaphragms regarding the material itself. The strength of the metal diaphragm is higher by multiple orders of magnitude, which is a requirement for sealing even higher pressures. The lower temperature dependency with respect to strength and degeneration allows for use at very high fluid temperatures. In principle, the higher density also reduces the permeation through the diaphragm, thus increasing the seal tightness of the pump for critical fluids that simultaneously tend to diffuse.

The primary disadvantage of metal diaphragm pump heads results from the comparatively low elasticity of the diaphragm, which is made from sheet metal. There are orders of magnitude between the elastic formability of plastics and that of metals. This significantly affects the construction size of hydraulic metal diaphragm pump heads because the stiffer metal diaphragms must have a considerably larger diameter compared to plastic diaphragms to handle the same stroke volume. This change in diameter affects the main components of the pump head (the "pump body" and the "hydraulic drive housing") in such a way that the mass of these parts, which are normally cylindrical, increases quadratically as does the price of the parts. Metal diaphragm pump bodies are thus fundamentally larger and more expensive than plastic diaphragm pump heads for the same stroke volume.

Metal diaphragm pump heads are usually equipped with perforated disks, which limit the movement space of the diaphragm and prevent impermissibly high deflections, as described in chapter 2.3.1 "Evolutionary steps". The hydraulic leakage is often replenished in a pressure controlled way, as shown in figure 2.54.

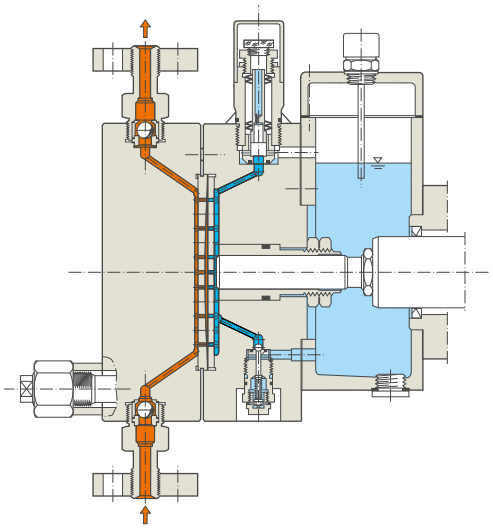

Figure 2.54: Hydraulic metal diaphragm pump head with perforated disk

A modification made to this design prevents leak replenishment from being carried out too early, i.e. during the phase when the plunger is located in front of the center position of its movement towards the diaphragm. The plunger acts like a control push rod here. This type of pump head is represented in figure 2.55.

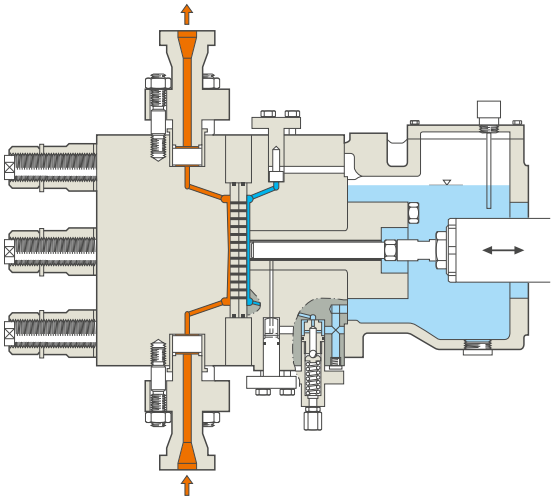

Figure 2.55: Metal diaphragm pump head with snifting valve

Other designs of metal diaphragm pump heads use mechanical sensors that detect the diaphragm position on the rear perforated disk and then enable leak replenishment.

Typical operation limits for this type of metal diaphragm pumps are as follows:
- Pressures up to 1200 bar
- Temperatures up to 200°C
- Flow rates up to 15 m³/h

Primary advantages:
- Extremely high discharge pressures possible
- Extremely high fluid temperatures possible
- Prevention of permeation through the diaphragm
- Very high metering accuracy
- Safe and environmentally friendly, thanks to hermetic tightness
- Reliable in operation, pressure limitation easy to integrate hydraulically
- Contamination-free pumping possible

Primary disadvantages:
- Comparably large space requirements and high costs due to large components
- For slurry pumping only usable within certain limitations

2.4.3.3 Special designs for hydraulically driven diaphragm pump heads

Pump heads with heating and cooling option

Customers frequently state a requirement for the pump to be able to convey fluids that must be kept within a certain temperature range. There are melts that must not solidify in the pump head or liquefied gases that are not supposed to vaporize.

For this purpose, many manufacturers provide pump head designs that can be heated or cooled allowing for correspondingly high heat transfer levels as needed. There are pump head designs with jackets for pump bodies, valve housings and combinations of the two. In the case of hydraulic diaphragm pump heads, the temperature of the hydraulic fluid can also be controlled.

In most cases, housing parts are equipped with a jacket that enables liquid cooling or steam heating as shown by figure 2.56, using the example of a diaphragm pump head. The heating or cooling medium flows through the spaces highlighted in red in the image.

Another solution is the electric heating of pump head components.

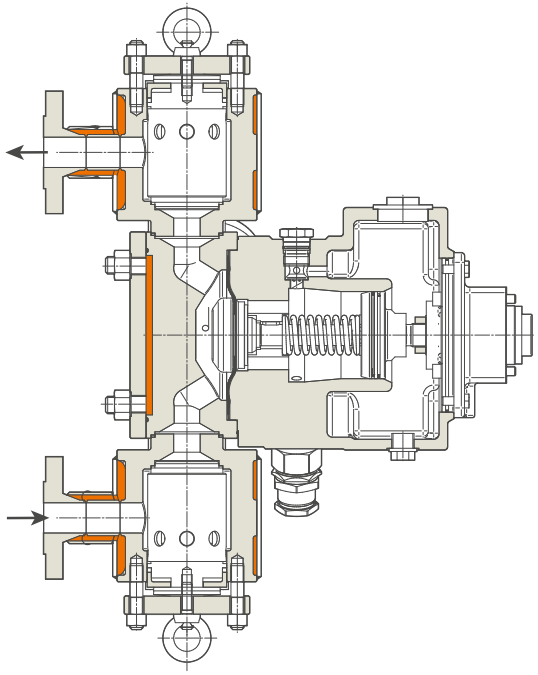

Figure 2.56: Diaphragm pump head with heating jacket

Remote pump heads

The design of hydraulic diaphragm pump heads provides the option of spatially separating pump elements. This way, thermal separation can be achieved for the pump at very high or very low temperatures of the pumped fluid. In these cases, only the fluid valves experience the extreme temperature.

Furthermore, separating the hydraulic part can prevent the pump as a whole from having to be set up in a hazardous area. In this case, it is the hydraulic oil and not the pumped fluid that moves back and forth between the two main pump assemblies, and only a few parts are located in the critical space, such as when pumping radioactive fluids.

In this setup the power transmission for the pumping effect is implemented using the pumped fluid or hydraulic oil. In one case the separately positioned valve head contains only the fluid valves and in the other case it also contains the diaphragm and the diaphragm monitoring. Figure 2.57 shows different basic designs.

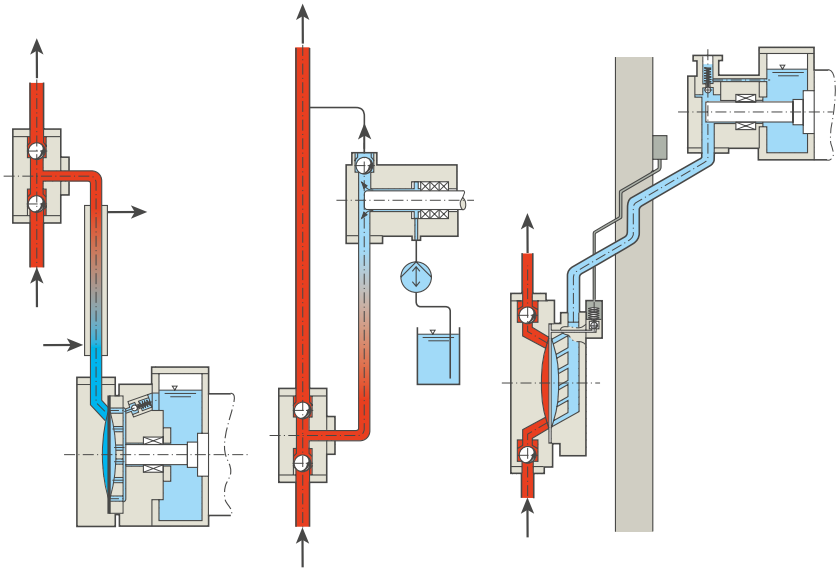

Figure 2.57: Remote heads with separated valve head with and without diaphragm

2.5 Fluid valves

The valves through which the pumped fluid flows can be classified as "fluid valves". These valves act as suction and discharge valves and form the inlet and outlet of the working chamber. Usually automatic check valves are used, as these are pressure-controlled and cannot be influenced from the outside. These check valves feature a comparably simple structure and normally consist of a housing, a moving closing body and a valve seat, which provides the sealing function together with the closing body. Depending on application requirements for the pump valves, the closing and sealing function of the moving closing body is supported by a spring.

In terms of a modular system, valves of various shapes but with the same nominal width usually share the same standardized installation space. This means that the body of the pump head can be equipped with valves suitable for the specific application as described in chapter 2.1 "Modularity of reciprocating positive displacement pumps". This also makes it easy to exchange the valve design in existing pumps for the purpose of adapting to the application without modifying the piping. The wetted parts of the valve are adapted to the specific pumped fluid with respect to material and surface quality. This increases the diversity of parts used but also means optimized function, service life and safety.

The extreme variety of pumped fluids, the enormously wide range of flow rates and the wide range of discharge pressures result in a diverse set of operating conditions for the fluid valves in reciprocating positive displacement pumps. These conditions are combined with stringent requirements regarding wear resistance, corrosion resistance, operational safety, reliability and low pressure losses.

Fluid valves contribute significantly to crucial metering pump properties and influence the following features:

- Metering accuracy
- Efficiency
- Maintenance effort and repair costs
- Availability
- Running noise, solid-borne sound and vibrations
- Inlet pressure loss

A number of parameters and boundary conditions are critical for designing fluid valves. First, the geometry of the valve is largely determined by process parameters, such as discharge pressure, fluid temperature, single-stroke volume and stroke frequency.

Second, fluid properties, such as viscosity, density, vapor pressure, gas content, solids content, chemical aggressiveness, and hygiene requirements, are decisive for the design, material selection and choice of surface quality for the valve parts.

The abundance of requirements makes it clear that general statements about valve selection cannot do justice to the actual complexity involved. The relationships between parameters and boundary conditions are complex, which means that making the correct valve selection often requires knowing all of the influencing variables as well as having sufficient experience. Nevertheless, the various designs do have some basic properties that can be taken into consideration when a selection has to be made.

2.5.1 Basic design of valves

Basic valve designs can be classified according to the geometry of the closing body, or rather the sealing geometry, as ball, disc and cone valves, see figure 2.58.

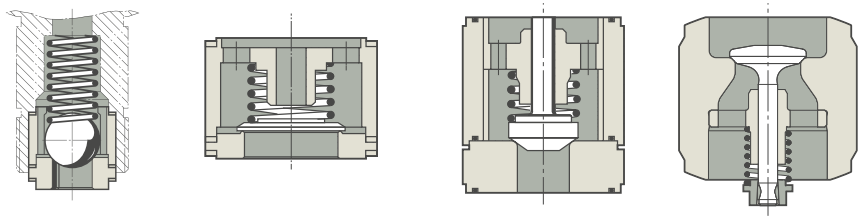

Figure 2.58: Fluid valves, basic designs

In principle, these basic designs have certain advantageous properties if certain operating conditions are given. The following presents a few indications for having a spring-loaded closing body and regarding the advantages and disadvantages of the basic valve designs.

Spring-loaded valves

Primary advantages:
- The progressive spring force reduces the lift height as the fluid is flowing through, thereby reducing what is called the closing energy, i.e. the potentially harmful deformation energy when the closing body hits the valve seat
- In the case of high-viscosity fluids, the spring force reduces or prevents something called the closing delay; in other words, when the closing body reaches the seat later than it should this can lead to flow rate losses and increased closing energy
- The spring load of the valve spring can ensure better defined valve closing properties and thus better metering accuracy

Primary disadvantages:
- Having a spring-loaded closing body results in higher pressure loss when the fluid is flowing through
- The spring requires installation space, thereby increasing the dead space of the valve
- The valve spring can lead to clogging, e.g. in the case of fibrous slurries
- The spring is an additional component coming into contact with the fluid and needs to have a suitable material selection

Ball valve

Primary advantages:
- The ball valve can be designed to have a low dead space and is therefore suitable for fluids with high compressibility
- The ball as a closing body is mechanically resistant to deformation and breakage, which makes it suitable for the highest pressures
- When the closing body is a ball, it rotates during operation and material loss from wear is distributed over a large surface, which is why the ball valve is good for use with abrasive slurries
- Valve balls are relatively easy to procure in a variety of materials and come with a high geometric accuracy and with very good surfaces qualities
- Metering accuracy can be improved by dual ball valves, even for slurries

Primary disadvantages:
- When the closing body is a ball, it has a relatively high volume and consequently the mass and closing energy are also comparably high

Plate valve

Primary advantages:
- When the closing body is a plate it has a relatively low mass and thus a low closing energy
- When the plate valve opens it quickly opens up a large cross section for fluid to flow through making it suitable for high-viscous fluids
- The springs of spring-guided plate valves have a relatively stiff characteristic curve, giving it little closing delay even for high-viscous fluids

Primary disadvantages:
- The plate valve has a relatively large dead space
- A plate valve without linear guidance does not close as precisely as guided designs
- In case of the spring-guided plate valve, the same area always touches the sealing surface giving it poorer wear resistance

Cone valve

Primary advantages:
- When the closing body is a truncated cone it has a relatively low mass and thus a lower closing energy than a ball
- If necessary, the conical closing body can be designed to be very stable and thus used for very high pressures
- The spring of the cone valve can be adapted to the application based on its characteristic load deflection curve

Primary disadvantages:
- The components of the cone valve are more complex, need more manufacturing effort and thus are relatively expensive

2.5.2 Special design of valves

There are some special valve designs to be found in the world of metering pumps. Examples are the wing valve and the annular valve.

Wing valve

The wing valve is named for its wing-shaped guide supports, which are attached to the plate-shaped or conical closing body, as shown in figure 2.59. Wing valves can have advantages with regard to exact linear guidance.

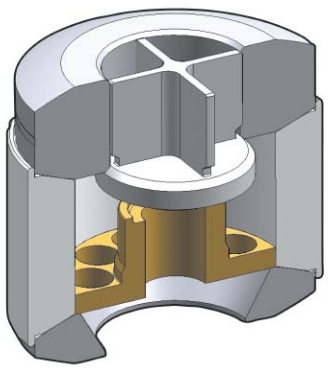

Figure 2.59: Example of a plate-shaped wing valve

Annular valve

The annular valve is another special design in which the closing body is designed as a ring. The ring can be guided along the inside diameter of the valve and be loaded with multiple springs. This design, shown in figure 2.60, has advantages with regard to the closing body mass.

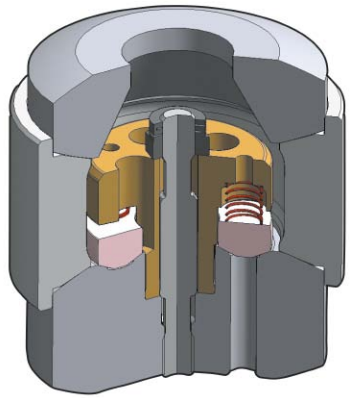

Figure 2.60: Example of an annular valve

Slurry valves

Pumping and metering of slurries place special, high demands on the pump. In particular, the fluid valves controlling the flow of the solid-liquid mixture have to match the application.

The slurries to be pumped are as diverse as the fluids themselves. In addition to the variation of the carrier fluid, the solids can be fibrous, adhesive, agglomerating, extremely hard, sharp-edged and varying in size. From this one can see that the slurry valve has to be matched to the specific solids content and properties.

If solid particles get stuck in the guide of the closing body there is a risk of the closing body getting jammed. The clearance in the guide is often increased to prevent this.

Particularly hard and abrasive particles in the flow require wear-resistant materials, such as hard metal. On the other hand, it can help to use soft materials in such cases. Soft materials can temporarily embed the particles and deprive them of their potential for causing wear. So this can prevent wear on the contact surfaces of the seat, closing body or on the closing body stroke limiter.

If slurries containing fibers are being pumped, the valve must not have any areas or geometries where the fibers can attach and accumulate. Thus valve springs are to be avoided.

Figure 2.61 shows a selection of suspension valves for which certain measures were taken regarding the structural design and selection of material:

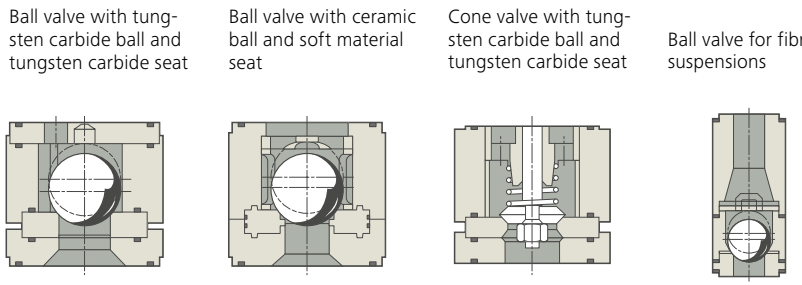

Figure 2.61: Suspension valves, designs

2.6 Diaphragms and diaphragm monitoring

The heart of the diaphragm pump head is the diaphragm. As described in chapter 2.3.1 "Evolutionary steps", the diaphragm represents the difference between the plunger pump head and other displacement pumps.

At first glance, the diaphragm is a simple component that divides the working space and hydraulic chamber. However, if one understands the various functions of the diaphragm and takes them into consideration, along with the wide range of application conditions, it becomes clear that the diaphragm cannot be a trivial component in many cases. State-of-the-art diaphragm pumps operate at pressures up to 1200 bar, at temperatures from -30°C to over 200°C, with brines, acids, slurries, emulsions and liquefied gases as well as with baby food. With a single stroke, they transfer fluid volumes ranging from a few milliliters to multiple liters. Figure 2.62 shows the range of fluids that are pumped with diaphragm pumps.

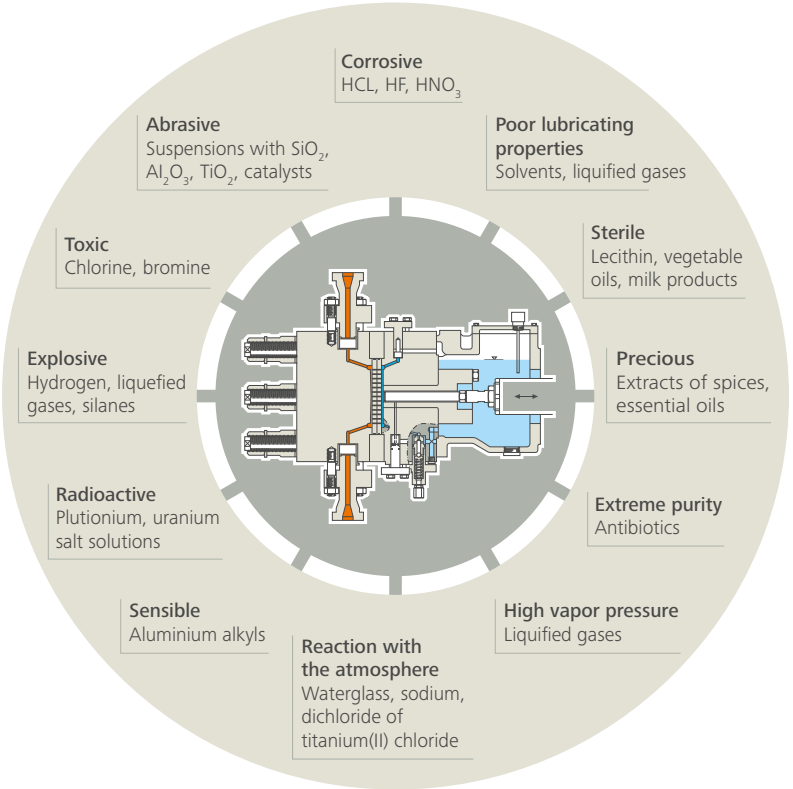

Figure 2.62: Diaphragm pumps move a wide range of fluids

The functional analysis of the diaphragm shows more than just the function of separating the fluid and the hydraulic oil. The diaphragm also has to transfer a movement and be sufficiently flexible and resistant to bending load cycles without breaking during long-term continuous operation. When in motion, it is usually under pressure from both sides. In the case of directly mechanically actuated diaphragms it has to bear the stresses and forces resulting from the pressure difference to atmospheric level.

Another, equally important, function is the sealing of both the conveyed fluid and the hydraulic oil to the environment at static sealing areas. This is the basis for the advantages of the diaphragm pump. Thus, in most cases, diaphragms also act as static sealing elements.

State-of-the-art diaphragm designs also provide the function of diaphragm monitoring. The monitoring function is usually realized by a multi-layered diaphragm construction, allowing pressure monitoring in the gaps between the layers.

Primary functions of the pump diaphragm:
- Separating fluid and oil
- Transmitting movement and force
- Sealing against the environment
- Enabling condition monitoring

Special polymers and metallic materials are used as diaphragm materials. Aside from resistance to corrosion, wear and aging, important prerequisites include properties ranging from high mechanical creep strength to fatigue strength. Consequently, the selection is reduced to relatively few materials.

Today, metal diaphragms are made primarily of austenitic steels, in exceptional cases also of titanium, nickel-based alloys or tantalum.

Elastomers and thermoplastics are used in the field of polymer diaphragms, which preferably combine a mostly universal chemical resistance, good flexural fatigue strength, notch insensitivity and a low cold flow. Due to their high chemical resistance, PTFE and derived, modified plastics, fluororubbers and polyethylenes have taken over the majority of applications. Also, diaphragm films of elastomers and PTFE are joined to combine their specific properties. Figure 2.63 shows various diaphragms made of elastomer and elastomer/PTFE composite material.

Figure 2.63: Various diaphragms laminated with elastomer and elastomer/PTFE composite material

Geometrically, most diaphragms are rotationally symmetric. They are manufactured both flat and preformed and they can consist of multiple layers of plastic film or sheet metal. Such multi-layer diaphragms are often filled with special oils or greases, so they are internally lubricated and coupled. Figure 2.64 shows a series of PTFE/multi-layer diaphragms.

The outer rim of the diaphragms is usually directly used as a sealing element or is at least part of the static sealing system between the working space, hydraulic chamber and the environment.

If additional mechanical forces are to be applied to the diaphragm, rigid parts are attached at the center of the diaphragm discs. This is done in the cases of directly actuated diaphragms, designs with a diaphragm spring or if a control or measuring element is attached to the diaphragm as discussed in chapter 2.3 "Pump head technology".

Figure 2.64: PTFE/multi-layer diaphragm family

Diaphragm monitoring

Many diaphragm pumps are equipped with a diaphragm monitoring system, shown in figure 2.65. Most diaphragm monitoring systems show initial partial diaphragm damage in time, before the imminent break. Thus, diaphragm monitoring reduces the risk of fluids escaping into the environment, which is particularly important in the case of fluids that are toxic or harmful to the environment.

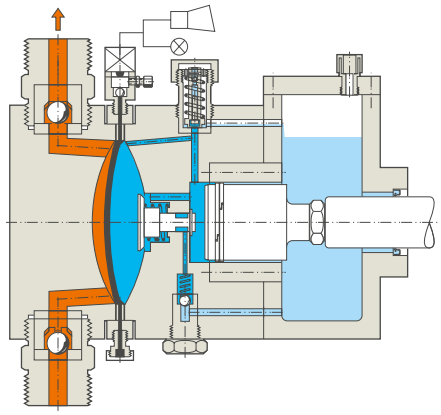

Figure 2.65: Pump with diaphragm monitoring

Another advantage is that the operator has time to respond, for example in order to properly shut down his process and plan maintenance measures.

If a diaphragm layer or individual diaphragm starts to leak, the pumped fluid or the hydraulic oil is pushed into the gap. This effects an increasing pressure in the gap of multi-layer diaphragms, which is transmitted to a manometer or pressure switch and displayed there.

Figure 2.66: Sandwich diaphragm for diaphragm monitoring

The diaphragm monitoring system often operates utilizing multilayer diaphragms, see figure 2.66, but double-diaphragm designs are also available. These form a third, fluid-filled chamber between two individual diaphragms, see figure 2.67.

In the case of double-diaphragm constructions with an intermediate chamber, the two main diaphragm layers are separated by a larger space, which reduces the risk of simultaneous damage. If a break occurs on one of the diaphragm layers, the fluids mix in the intermediate chamber and the change of conductivity can be measured there, for example.

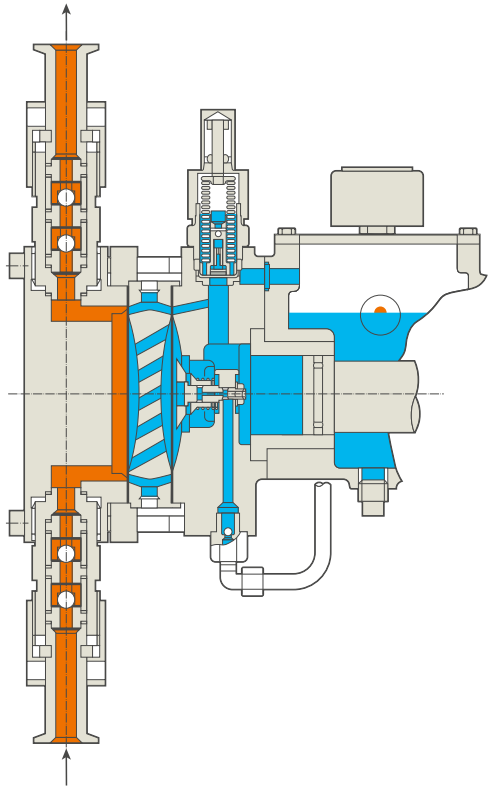

Figure 2.67: Double-diaphragm with intermediate chamber

A few fluids, primarily liquefied gases such as CO_2, permeate through plastic diaphragms. For such cases there are special diaphragm monitoring systems available that can detect the difference between a slow increase in pressure in the gap due to diffusion and a fast increase in pressure due to the diaphragm breaking.

3 Directives, standards, and specifications

This chapter summarizes the key directives, specifications and standards from the field of reciprocating positive displacement pumps. Specific standards also have an effect on the engineering design of a product, such as the "NORSOK coating".

3.1 Directives and standards in Europe

The primary purpose of the directives and standards valid within the European Union is to ensure free movement of goods within the EU. Important European directives for pump technology include the "Machinery Directive" and the "ATEX" Explosion Protection Directive.

Compliance with directive 2006/42/EC (Machinery Directive) is mandatory for shipments within the European Economic Area. In Germany, this directive has been transformed into national law with the "Product Safety Act" (Produktsicherheitsgesetz).

For operation in potentially explosive areas, the directive 2014/34/EU (ATEX Explosion Protection Directive), is implemented in Germany by means of the "Explosion Protection Product Act" (Explosionsschutzprodukteverordnung).

The compliance with EU directives must be confirmed with an EU Declaration of Conformity by the manufacturer.

Harmonized European standards are available for a conformity assessment. These include EN ISO 12100, "Safety of machinery – General principles of design – Risk assessment and risk reduction" or, applied to a specific product as a general standard and product-specific standards, for example EN 809, "Pumps and pump units for liquids – Common safety requirements".

3.2 Explosion protection

In many processes and production sites, explosion protection plays a central role, particularly when pumping combustible substances.

Preventing explosions means preventing the simultaneous occurrence of flammable substances such as gas, vapor, mist or dust, the oxygen contained in the air, and a source of ignition at a given location. The general term "source of ignition" includes potential hazards such as sparks, hot temperatures, radiation, lightning strikes, electrostatic charges, etc.

The general purpose is to prevent the formation of a potentially explosive atmosphere (primary explosion protection). If this is not possible, the objective is to prevent the ignition of this explosive atmosphere (secondary explosion protection). Should this also be impossible, the effect of the explosion must be prevented or minimized (tertiary explosion protection).

On this basis, there are various types of ignition protection (Ex e, Ex i, Ex d, Ex n, Ex p, Ex c, etc.), that can be used for equipment in potentially explosive areas.

In the European Union, equipment intended for use in potentially explosive atmospheres must be designed in accordance with the ATEX directive, i.e. the EU directive 2014/34/EU. This applies to pumps, pump skids, and packages. For plant operators, Directive 1999/92/EC also applies. Corresponding codes are the National Electrical Code (NEC) for the USA and the Canadian Electrical Code (CEC) for Canada.

In terms of standards, the most important series of standards is DIN EN 60079 for electrical equipment and DIN EN 80079 for non-electrical equipment. These are based on the international standards IEC 60079 and IEC 80079. To date, these common standards have been introduced on an international level. These have extended to common regulations that form the IECEx Community. Unfortunately, different country-specific laws are in place around the world. IECEx is currently only applied in a few countries, despite the fact that many countries are represented in the IEC organization. For example, manufacturers of equipment that is installed in potentially explosive atmospheres must comply with the laws and regulations of the respective country of installation or, if there is no country-specific law in place, to the requirements of the operator.

In addition to the classification of the type of explosive atmosphere (mining, gas, dust, USA: fibers), the operator determines the explosion protection zone (Zone 0, 1, 2; USA: NEC 500: division 1 or 2) and thus the protection level necessary for the equipment to be installed in the explosive atmosphere. In addition, for gases, the operator defines the gas group and the temperature class, corresponding to the explosion hazard of the gas and the maximum permitted surface temperature of the gas. As a result, no self-ignition is possible.

For equipment manufacturers, this requires having employees who are familiar with the field of explosion protection, who select the right equipment for the respective application and finally install and connect it correctly.

One option for certifying the necessary qualification in accordance with the IEC standards is the IECEx scheme of "IECEx Certified Persons".

3.3 Eco-friendly design and efficiency ratings of electric motor drives

The European Ecodesign Directive 2009/125/EC serves to "create a framework for defining requirements for environmentally friendly design of energy consumption-related products". It was implemented into national law in the "Act on ecofriendly design of energy consumption-relevant products".

Particularly relevant factors for environmentally friendly design of pumps are the efficiency requirements of electric motor drive engineering, which are specified in detail in the Commission Regulation (EC) 640/2009 and IEC 60034-30.

The mandatory minimum efficiency levels are determined in International Efficiency Classes IE1 to IE4, which are presented in figure 3.1. The schedule for introducing these levels is shown in figure 3.2.

Since the latest version entered into force on January 1, 2017, level IE3 applies to most motors. When frequency inverters are used, level IE2 applies.

The following are characteristics of the motors that are subject to this regulation:
- Single-speed three-phase 50 Hz or 50/60 Hz squirrel-cage induction motors
- 2- to 6-pole
- Rated voltage up to 1,000 V
- Output power between 0.75 kW and 375 kW
- Designed for continuous operation

Exceptions are motors with the following design features (selection):
- Operation at heights above 1,000 meters above sea level
- Ambient temperatures below -15 °C or above 40 °C
- Operation in potentially hazardous areas as defined by European directive 2014/34/EU

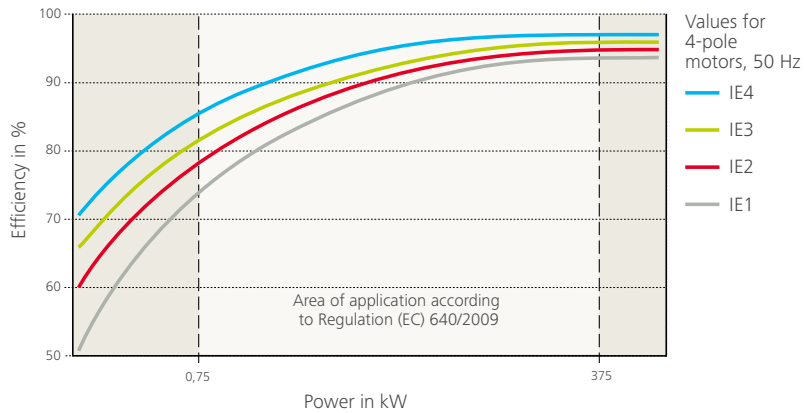

Figure 3.1: Efficiency diagram in accordance with EC Regulation 640/2009

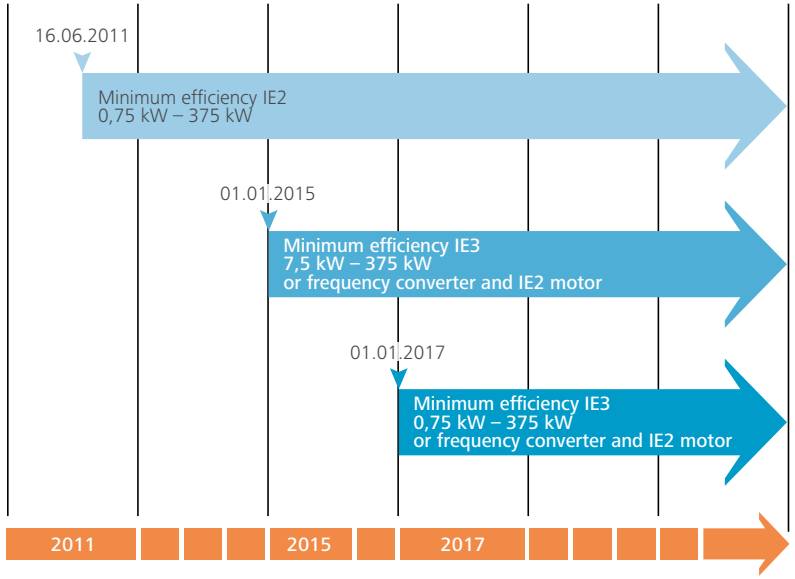

Figure 3.2: Schedule for introducing minimum efficiency levels

3.4 Standards outside Europe

Outside Europe, particularly in the oil and gas industry, the standards of the American Petroleum Institute (API) have gained acceptance.

Within the API standards, in turn, there are normative references to other national and international standards, such as ASME, ASTM, ISO, EN and NACE, which have to be complied with.

Originally, these standards provided a basis for purchasers to make products comparable. In the event of a request for quotation that references the corresponding API standard, the manufacturer must ensure that all deviations from the standard are included in a so-called deviation list. Manufacturers will successively attempt to adapt their products completely to the API 674 and API 675 standards, because these have now been accepted globally and incorporated into the corresponding ISO standards. By collaborating in the respective committees, pump manufacturers can use their know-how to play an active role in defining these standards.

3.5 API 674 3rd edition: Reciprocating Positive Displacement Pumps

As for most standards, first, the relevant terms that will be used later in the sections are defined. For API 674, the following are of interest, because they are not mentioned in other standards. For example, this standard differentiates between direct-acting pumps and indirect-acting pumps (power pumps). Direct-acting pumps feature steam, pneumatic, or gas drives on the drive side. Power pumps, on the other hand, always have a crank drive with an internal or external gear. Thus, we arrive at one of the main points of this standard, the "maximum permitted stroke frequency for continuous operation". These maximum permitted stroke frequencies are specified depending on the stroke length of the pump in section 6.3.1, tables 3 and 4. For pumps with five or more plungers, the API tabular value may be exceeded by 20%. For intermittent operation, these stroke frequencies may be exceeded by another 10%.

With regard to the wetted part of the pump, a distinction is made between piston and plunger pumps. The difference here is in the type of seal, as outlined in figure 3.3. In the piston pump, the actual seal is in the bushing or the cylinder, similar to the combustion engine. For plunger pumps, the plunger moves back and forth in an upright seal, a stuffing box.

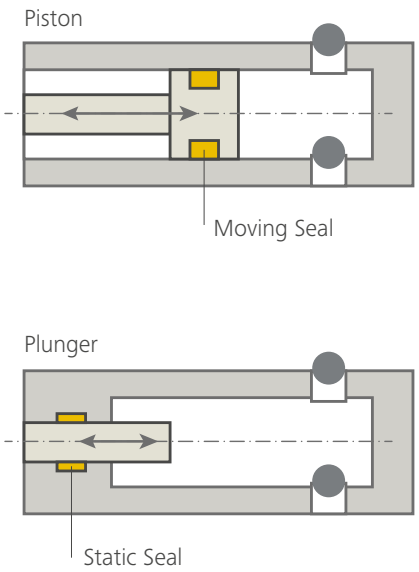

Figure 3.3: API 674, Piston and plunger pumps

chapter 6 of API 674, "Basic Design," requires that the pump have a service life of at least 20 years, of which 3 years of operation have to be ensured without interruption, whereby normal maintenance and wear parts are explicitly exempt. Reference values for the required service life for wear parts are specified in table 1 under section 6.1.1, e.g. 4-12 months for packing and 9-24 months for valves.

Important to the discussion of service life is the fact that values actually reached in operation may deviate considerably from the requirement, since the real service life depends on factors like solid content, corrosion, and pump maintenance.

API 674 3rd edition introduces minimal required nozzle forces (External Forces and Moments) from ISO 13710 into the standard. This is important, since the double nozzle forces from API 610, frequently requested by customers, cannot be absorbed by reciprocating positive displacement pumps due to design. If high forces are to be absorbed, they must be caught by additional supports.

One change in comparison to the 2nd edition that is important for all manufacturers outside of the US is the extensive acceptance of ISO standards. This particularly affects the specification of materials. In this respect, there is now an extensive comparison list of materials in Annex A of API 674.

The following sections depict the most important points of API 674 with respect to the acceptance tests for power pumps.

3.5.1 Performance test in accordance with ANSI/HI 6.6-2015

The performance test can be used to demonstrate reliable operation of the pump under the given pressure conditions and within the required flow rate range. chapter 8.3.6.1, API 674 references the Hydraulic Institute Pump Standard ANSI/HI 6.6-2015. This standard stipulates the use of the "manufacturer test procedures" for the performance test. Thus, in accordance with the standard, a manufacturer may stipulate the following: "For speed-controlled pumps, the pump must be checked at 5 points between the minimum and maximum stroke frequency in accordance with the technical data sheet." The permissible deviations for the performance test can be found in table 13 in section 8.3.7. For the rated capacity, deviations are admitted up to 3% above the specified value, but are not admitted at all below this value. For rated power, deviations up to 4% below the value are permitted for power pumps, and there are no specifications for direct-acting pumps. For NPIP or NPSH, no upward deviations are permitted.

3.5.2 NPIPR/NPSHR Test

When determining the NPIPR (Net Positive Inlet Pressure Required) or NPSHR (Net Positive Suction Head Required) value (for definition of these, see chapter 4.2.2.2 "NPSH/NPIP"), API 674 suggests two different methods. In the following, you can find an interpretation of the methods:

- The NPIP test describes a measurement setup that takes a high-resolution measurement of the pressure between the pulsation suppression device and the pump inlet with a sampling rate of 1 kHz. The test is considered passed if the measured negative pressure peak is less than or equal to three times the specified inlet pressure loss or if the smallest measured pressure is greater than or equal to 1.1 times the vapor pressure.
- The NPSH test describes a method by which the suction pressure is lowered to the NPSHR value of the pump, and the flow rate of the pump is measured. The measured value may not deviate from the measured value with sufficient suction pressure by more than 3%.

3.5.3 Sonic emissions in accordance with ISO 3744

As an optional test, a measurement of the sound pressure level in accordance with ISO 3744 is specified, whereby this is usually requested by the customer. When carrying out such a measurement, it should be noted that the noise development during a Factory Acceptance Test (FAT) generally exceeds the values to be expected during on-site operation. The reasons for this include loosely installed machines, other noise sources, reflections of noise, potential resonance effects and, in particular, throttling devices.

3.6 API 675 3rd edition: Controlled Volume Positive Displacement Pumps

A wide range of ISO standards is referenced in the API 675, similarly to API 674. A section of interest in the standard is chapter 4.1 "Unit Responsibility". Here, the manufacturers are required to ensure conformity to all basic standards and to ensure that subcontractors likewise comply with them.

First, the permitted designs for API 675 pumps are addressed. On the fluid side, diaphragm pump heads with single- and double-diaphragm setups are permitted. These diaphragms must, however, be hydraulically actuated. Mechanically actuated diaphragm pumps do not conform to the standard. Packed plunger liquid ends are also permitted. Figure 3.4 shows the designs permitted by API 675.

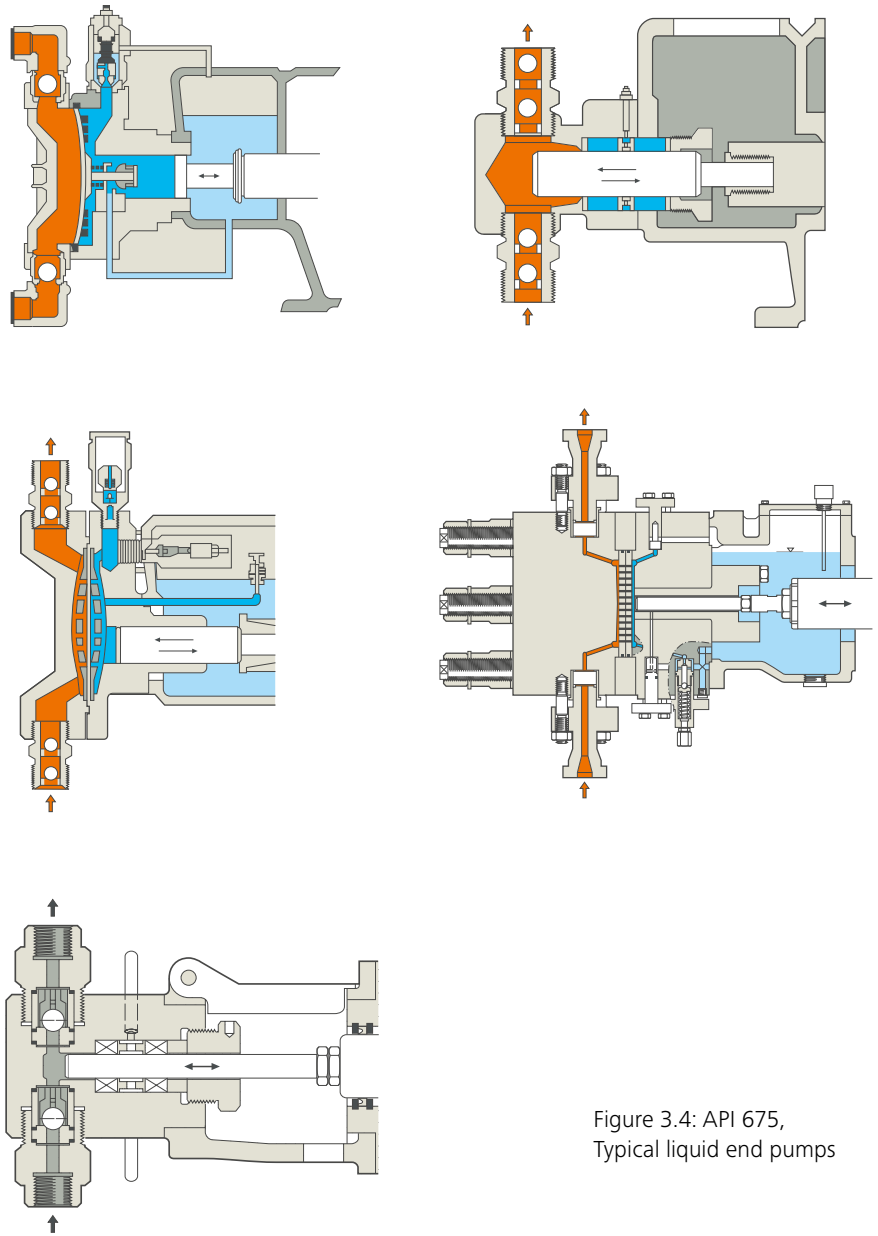

Figure 3.4: API 675, Typical liquid end pumps

Important design aspects are defined in chapter 6.1 of the standard. Many discussions in this respect involve the concept of "rated capacity". In the standard, this term is defined as 110% of the "maximum capacity specified". From this value, the permitted steady state flow accuracy is derived, which amounts to ±1% of the rated flow for the entire control range of at least 10:1. Figure 3.5 illustrates the steady state flow accuracy.

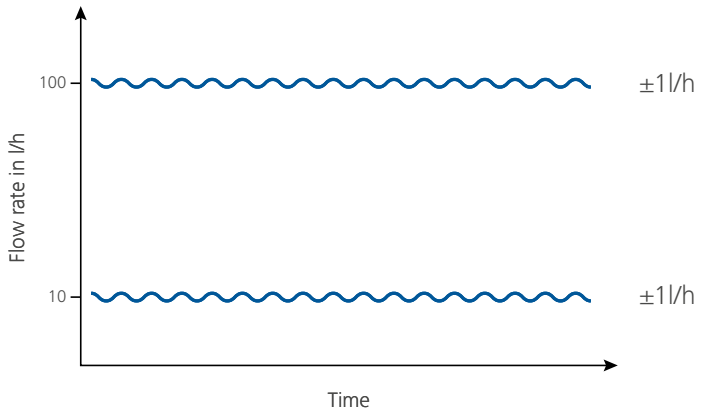

Figure 3.5: API 675, Steady state flow accuracy

Linearity and repeatability of the flow rate adjustment, both shown in figure 3.6, must lie within a range of ±3% of the rated flow.

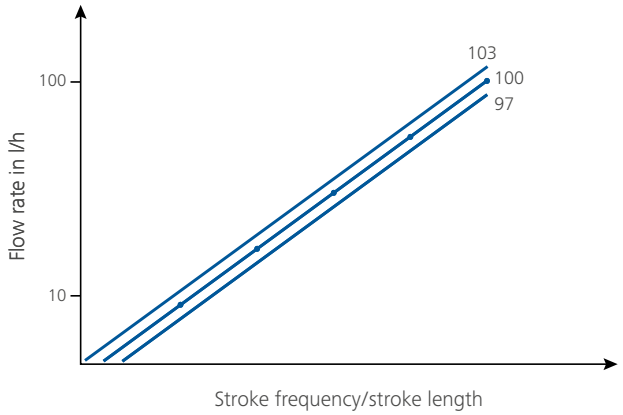

Figure 3.6: API 675, Repeatability and linearity

Under constant operating conditions, i.e. pressure, temperature, voltage supply, fluid properties, etc., these requirements typically do not present any special challenges.

Since API 675 aims toward the adjustability of the flow rate, the permitted mechanisms are defined as follows:

- The flow rate may be adjusted using the actual or effective stroke length. Examples for which the actual stroke length can be adjusted include, but are not limited to, variable eccentric or rocker arm drive units.
- Effective stroke length adjustment is referred to as "hydraulic lost motion" or spring-cam drive unit respectively.
- It is permissible to adjust the flowrate using the variable stroke frequency.

A control range of 10:1 required by API 675 is reflected in the performance test. The following rated flow points are to be adjusted in ascending and descending order, whereby the rated flow corresponds to the maximum flow rate at operating pressure of the pump: 10%, 25%, 50%, 75% and 100%.

Unlike API 674, API 675 defines the NPIP test as a flow rate measurement with NPIPA equal to NPIPR and a permissible deviation of 5% in comparison to the conditions with sufficient suction pressure. An NPSH test is no longer described at all in API 675.

One addition made to API 675 is the incorporation of Annex F "Pulsation and Vibration Control Techniques". This is identical to API 674 with the exception of "Safety against PLV setting" (10% API 675 vs. 5% API 674).

3.7 NORSOK

The Norwegian set of standards NORSOK must also be mentioned as an additional important source of standards.

"The NORSOK standards are developed by the Norwegian petroleum industry to ensure adequate safety, value adding and cost effectiveness for petroleum industry developments and operations. Furthermore, NORSOK standards are as far as possible intended to replace oil company specifications and serve as references in the authorities' regulations…" (see NORSOK website).

So far, the NORSOK standard has been so successful that it has started seeing frequent use outside of Norway, and is occasionally used as a basis for company specifications.

Corrosion protection NORSOK M-501

NORSOK standards have become established primarily in the area of corrosion protection and material technology. Because corrosion protection currently accounts for a large proportion of maintenance costs, NORSOK M-501 "Surface preparation and protective coating" has very stringent requirements in this respect. Special paint systems require pre-qualification by a paint manufacturer, and the processor must be able to provide the corresponding evidence and have qualifications for painters and paint inspectors.

Special steels NORSOK M-650, NORSOK M-630

NORSOK has very high quality requirements for special steels such as Duplex, Super Duplex, and 6Mo, and manufacturer qualification is mandatory. Because the NORSOK standards in this area have practically become industry standards, the availability of materials with a corresponding qualification is usually not an issue today.

NORSOK standards in the area of material qualification:
- NORSOK M-650: "Qualification of manufacturers of special materials"
- NORSOK M-630: "Material data sheets and element data sheets for piping"

3.8 NACE

The National Association of Corrosion Engineers (NACE) is a leader in corrosion protection. In particular, the two following sets of standards are used very frequently, primarily in the oil and gas industry, for what is called "acid gas application," i.e. the presence of hydrogen sulfide (H_2S) in the fluid conveyed:
- NACE MR0175/ISO 15156: "Petroleum, petrochemical, and natural gas industries – Materials for use in H_2S-containing environments in oil and gas production"
- NACE MR0103: "Petroleum, petrochemical and natural gas industries – Metallic materials resistant to sulfide stress cracking in corrosive petroleum refining environments"

The sets of NACE standards mentioned above specify recommendations for how material damage induced by acid gas can be prevented.

The standard material 316/316L, corresponding to 1.4401/1.4404, meets the requirements of both standards, for example. Depending on the H_2S content, temperature, and pH value of the conveyed fluid, it may also be necessary to use high-quality materials (e.g. nickel-based materials).

3.9 Company and project specifications

Predominantly in the oil and gas industry, but also in other industries, there are additional company or project specifications that must be considered. Major corporations such as BASF, Shell, BP, Total, and Saudi Aramco have their own specifications and company standards that pump manufacturers acting as suppliers must meet.

The specifications relate to the pump itself, but also to materials, drives, painting, tests, documentation, etc.

These company specifications are very frequently based on API standards. In the area of paint and materials, they are often based on NORSOK standards.

Project specifications are mostly based on company specifications that are given project-specific, detailed adjustments.

4 Integrating metering pumps into the overall system

The following chapter provides an overview of the interactions between the pump and overall system, and presents options for integrating the pump. Topics of discussion for the system design include relevant fluid properties, criteria for safe operation of the pump and the basics of piping calculation. You will become familiar with different pulsation analysis approaches and their origin in standards. In addition, the instrumentation frequently used in pump systems will be presented along with options for process control. Condition monitoring systems can be used and multiple pumps can be synchronized to optimize operation, thus optimizing the service life of systems. Making selective changes to the fluid kinematics using servomotors opens up new application fields.

4.1 P&ID

Optimal system operation requires matching equipment components, such as the pump, piping, fittings and instrumentation, with the fluid properties and production concept. Considering the pump by itself is not enough. The design must always take into account the interaction between the pump and the overall system. In many cases, this is necessary for the whole operating range of the system and not just for one single operating point.

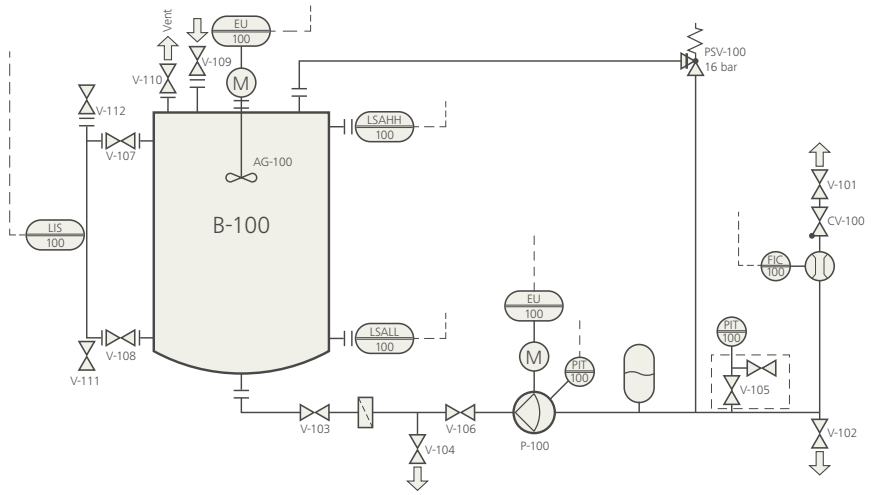

Figure 4.1: Process & instrumentation diagram

Figure 4.1 shows a typical system with a reciprocating positive displacement pump. It can be seen that, in addition to the process requirements, such as discharge pressure and flow rate range for the respective fluid, an optimal pump selection requires attention to both the suction-side conditions and the discharge-side installation conditions.

Ventilation and drainage lines are usually installed and an external safety valve is always installed. For most applications, filters, pressure transmitters and flow meters are located upstream of the pump entrance. In many cases, it is necessary to install pulsation suppression devices.

If the manufacturer of the metering pump is commissioned to implement the entire pump system, specific experience will allow him to satisfy the requirements for selecting and dimensioning the individual components.

In addition, a favorable spatial arrangement allows consideration to be given to process-related concerns as well as good usability in operation or sufficient access when service is being carried out.

4.2 Hydraulic and mechanical integration

To ensure hydraulically and mechanically smooth operation of the pump while interacting with the system several fluid properties must be known. These properties are relevant to both the pump design and the design of the corresponding piping.

4.2.1 Fluid properties

The fluid properties that are important for the pump design and installation are density, viscosity, vapor pressure, compressibility, sound velocity and consistency concerning slurries and melts. The temperature dependency of these properties must also be considered. Furthermore, pressure, temperature, flow speed and chemical reaction behavior are crucial variables for designing equipment, piping and fittings.

Reciprocating positive displacement pumps can be used to pump fluids of any type, including but not limited to liquefied gases, melts and slurries. Here, "liquefied gas" refers to substances that are gaseous under atmospheric conditions and become liquefied through compression or cooling. Liquefied gases can be pumped either in a liquefied state or as a supercritical fluid. For liquefied gases, special attention must be paid to the fluid properties and the system design.

Density

Because reciprocating positive displacement pumps convey fluids volumetrically, but the required substance volume flow is often specified as a mass flow, density is a critical variable.

This also means that the size of the pump – and thus investment cost – depends on the density. The higher the density is, the smaller the pump is for the required mass flow. This is especially relevant for liquefied gases, which often have a lower density than many conventional fluids. In this case, a higher density may be reached through additional cooling or higher suction pressure.

Compressibility

As explained in chapter 2.3.1 "Evolutionary steps", the fluid is compressed inside the pump. The density on the discharge side ρ_2 is higher than that on the suction side ρ_1. The ratio of density change to suction-side density is called relative compression κ or relative compressibility:

$$\kappa = \frac{\rho_2/\rho_1 - 1}{100} \quad (4\text{-}1)$$

Do not confuse relative compression with compressibility χ according to equation 4-2, where V represents volume and $\partial V/\partial p$ the change in volume as a function of pressure:

$$\chi = -\frac{1}{V}\frac{\partial V}{\partial p} \quad (4\text{-}2)$$

Some fluids, such as water, mercury or glycerol, have a low compressibility in contrast to the high compressibility of hydrocarbons or alcohols. Liquefied gases are particularly compressible. This must be taken into account when calculating the volumetric efficiency. Higher compressibility means lower volumetric efficiency. This aspect also has an effect on economic considerations. If the volumetric efficiency is low, then it may be necessary to select a larger pump in order to achieve the desired flow rate. In the worst-case scenario, the volumetric efficiency goes to zero for a very high compressibility. In this case, the pump compresses and decompresses the fluid without conveying it any longer. The compressibility can be reduced by cooling the fluid.

Examples of the compressibility of several fluids are provided in figure 4.2.

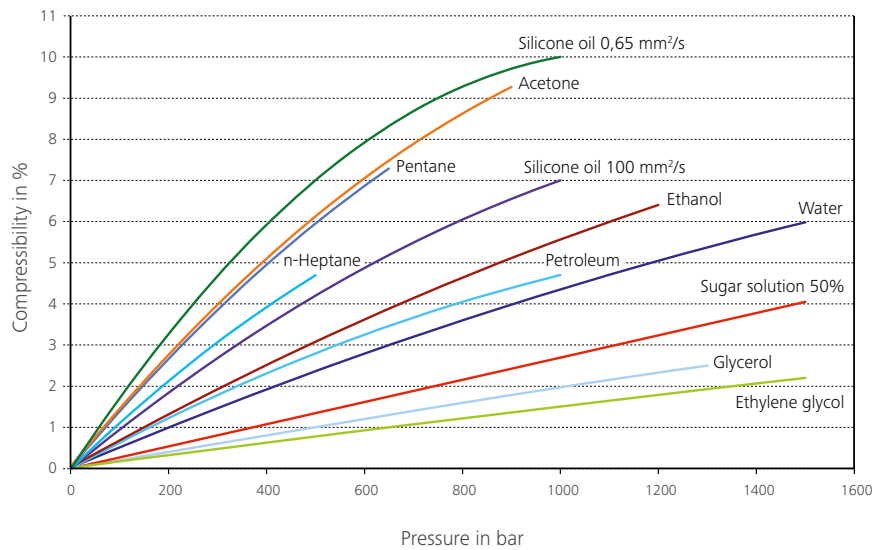

Figure 4.2: Relative compressibility for various fluids

Vapor pressure

Upon compression, fluids heat up. This may affect the vapor pressure, which is a critical variable for designing the suction-side installation. More details are provided on this in chapters 4.2.2.1 "Operating criteria" and 4.2.2.2 "NPSH/NPIP". The general rule is that highly compressible fluids also heat up more significantly. For low-compressibility fluids, the heat of compression is negligible in the majority of cases. If the fluid has a considerably higher outlet temperature than inlet temperature, then the pump head will also heat up after several strokes. This is another example of where special caution is advisable for liquefied gases, since they are normally stored on the suction side at vapor pressure. Upon inlet into the pump, the liquefied gas comes into contact with the heated pump head and evaporates. Not only does this cause the volumetric efficiency to drop, the subsequent implosion of the gas bubbles during compression results in noise generation and, in the worst-case scenario, wear on the pump. This is why either a cooling system

or a booster pump must be provided. Cooling can take place in the suction-side piping or in the pump head. An alternative option is heating the gas-phase in the suction tank in order to increase the pressure above the vapor pressure.

Special caution is also advisable if the pump is being set up at a high altitude. While this will not affect the vapor pressure, the atmospheric pressure does drop as altitude increases. The suction-side installation design must therefore include a special check to ensure a sufficient margin between the suction pressure and the vapor pressure.

Viscosity

Knowing the viscosity of the fluid is absolutely vital for the correct design of the piping and pump. The viscosity η or internal friction is the degree to which a fluid resists deformation. This resistance creates friction pressure losses as the fluid moves through pipings, fittings and pumps. For many fluids, viscosity is purely a material property. It is independent of both the time during which the fluid is exposed to the deformation and the shear velocity. Such fluids are called Newtonian fluids. If such a dependency exists, the fluid in question is called non-Newtonian. If viscosity changes with time, then the fluid is either called thixotropic (viscosity decreases over time) or rheopectic (viscosity increases over time).

The time-dependent viscosity anomalies have longer periods than the stroke frequency of the pump. Thus, they only need to be taken into account when the pump starts and stops. The minimum or maximum value can normally be expected to be reached in a matter of several seconds. In the case of rheopectic fluids, the system must be designed for maximum viscosity. If a thixotropic fluid is present, there is an option to start up using closed circular piping instead of designing the system to the highest viscosity, see figure 4.3.

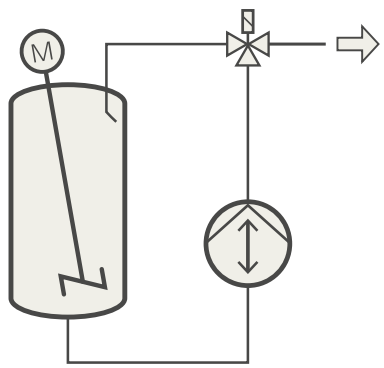

Figure 4.3: Starting up with closed circular piping

Upon starting (for high-viscosity fluids), the pump begins moving the fluid at a low flow rate in a circuit in order to keep the friction pressure losses low. Once minimum viscosity has been achieved, the system can switch to normal operation.

If the viscosity is dependent on the shear velocity, then the fluid is either a pseudoplastic, or shear-thinning (the viscosity decreases as flow velocity increases), or a dilatant, or shear-thickening (the viscosity increases as flow velocity increases). In the case of Bingham fluids, a certain yield point must be overcome first in order to enable the fluid to flow. Pumping pseudoplastics and Bingham fluids requires that enough suction pressure be applied to overcome the high viscosity and to achieve the flow velocity required for operation.

Examples of non-Newtonian fluids include blood, polymer melts, paints, dyes, slurries and toothpaste.

Temperature and pressure dependency

All fluid properties depend on temperature and pressure. For most properties, the temperature dependency has the higher impact on the metering process. If the suction tank is set up outdoors, it may be subject to major temperature fluctuations between night and powerful solar radiation during the day. In such cases, the vapor pressure in particular may fluctuate significantly. The highest vapor pressure must be taken into account in order to implement a cavitation-free design for the suction side. Density fluctuations are relevant in cases where volumetric flow meters are being used, as the changing mass flow may result in metering errors. The compressibility is heavily dependent on pressure and temperature, which may result in fluctuations in volumetric efficiency and metering accuracy, especially for liquefied gases. The same is true if dissolved air or inert gas outgases from the fluid due to a drop in pressure or increasing temperature, or if liquid evaporates.

The viscosity is heavily dependent on temperature. For high-viscosity fluids, it may be advisable to heat the piping to reduce the viscosity and thus the pressure losses.

Melts

Trace heating – or at least good insulation – is also necessary for melts, in order to prevent the melt from crystallizing inside the piping or inside the pump. "Melts" refers to substances that are solid under ambient conditions. Examples of melts commonly pumped with metering pumps are sulfur, urea, melamine and polycarbonates. It is usually necessary to heat as well as insulate all lines and the pump head (for more information on heated pump heads refer also to chapter 2.4.3.3 "Special designs for hydraulically driven diaphragm pump heads"). For low flow rates, it is advisable to install the entire metering system in a heating cabinet instead of equipping all single components with heating jackets. Fittings, such as filters or valves, can be operated from the outside. An example is shown in figure 4.4.

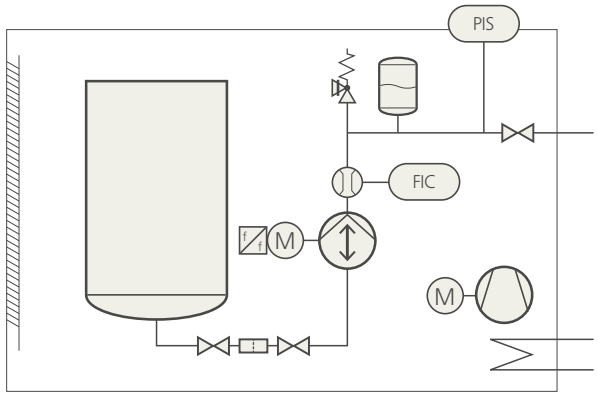

Figure 4.4: System for metering melt in a heating cabinet

Slurries

In the case of slurries, multiple properties must be given due consideration: the concentration of the solid particles and their size and size distribution as well as the hardness and shape of the particles, e.g. round or fibrous. This is necessary to evaluate the sedimentation rate and for correct valve selection. The sedimentation rate can be estimated using the densities of the two phases, the diameter of the particles and the viscosity of the fluid. At higher concentrations, the sedimentation rate drops due to the interaction of the particles with each other.

When slurries are being metered, sedimentation must be prevented in and upstream of installations. It is recommended that suction take place out of an agitated storage container or a section of closed circular piping where the particles are kept suspended. Additional installation instructions are explained in figure 4.5.

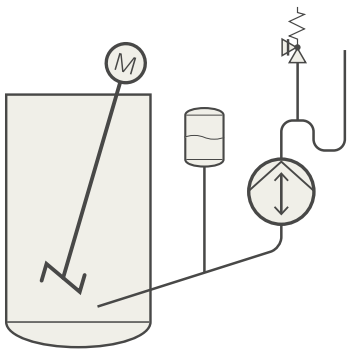

Figure 4.5: Metering slurries

The suction line should ascend gradually away from the tank or the closed circular piping. The withdrawal point should be positioned at a point in the tank with high turbulence and never at the lowest point of the tank or the line. It is best to connect fittings to long vertical tap lines. When doing so, functionality must still be ensured for pulsation dampers. Sedimentation in the pump discharge valve should also be prevented, particularly when the system is stopped. Here, it is advisable to use a double-U pipe connection with as short of a vertical tap line as possible downstream of the discharge valve. It is also advisable to use draining options, or preferably flushing connections, on the suction side of the pump and at the lowest points of the piping.

Examples for slurries commonly used in the process industry include diatomite, titanium dioxide, aluminum oxide or suspended catalysts, such as Raney nickel.

Sound velocity

Pressure waves move at sound velocity. To calculate pressure pulsations in the piping as well as resonances, it is imperative to know the sound velocity (more detail is provided on this in chapter 4.2.2.3 "Fluid mechanics and design of piping"). Here, pay special attention to the fact that the sound velocity of a liquid/gas mixture deviates heavily from the sound velocities of the pure phase of each substance. Even if a fluid has only very low gas content, the sound velocity drops dramatically, occasionally to less than the sound velocity of the gas, which is lower than that of the fluid. This effect arises if the fluid evaporates due to pressure fluctuations in the piping or if dissolved air or inert gas outgases from the pumped fluid. This phenomenon is especially relevant on the suction side, as the pressure in the piping practically always drops to below the pressure in the suction tank due to pressure losses.

Flow speed

Flow speed is not a true fluid property, but should be mentioned here since it is necessary for carrying out pressure loss analyses. The flow speed v is found using the flow rate $\dot{V}$ divided by the cross-sectional area A of the piping or the fitting with the diameter d:

$$v = \frac{\dot{V}}{A} = \frac{\dot{V}}{\frac{\pi}{4}d^2} \quad (4\text{-}3)$$

The effect of the diameter on pressure loss should not be underestimated. Doubling the diameter reduces the flow speed down to one quarter of what it was previously.

Chemical reaction behavior

The interaction of the fluid with its environment is an important factor with respect to the pump design and makes a difference when selecting the wetted materials. Heavily oxidizing materials, such as peroxides, have the potential to react with combustible

substances violently enough to cause an ignition. This fact must be considered when selecting the proper intermediate fluid between the diaphragm layers. Some fluids can even ignite upon making contact with the air or react violently with water and thus with the humidity of the air. An example of this is triethylaluminium. When these fluids are used, it is necessary for safety reasons to consider the possibility that all diaphragm layers could break at the same time, as rare as this occurrence may be. One potential solution is to cover the holder for the hydraulic fluid with nitrogen.

Corrosion must be prevented for all wetted components. There are different types of corrosion. DIN EN ISO 8044 defines 36 corrosion types. One very common type is surface corrosion, which is the uniform erosion of the component surface, often caused by acids and brines. In order to guarantee mechanical stability for all pressure-bearing components, only very low corrosion rates are permitted for pumps. Pitting corrosion is also critical. It mostly occurs when chlorides are used. Due to pulsating stress, it is possible for corrosion fatigue to affect reciprocating positive displacement pumps. Causes for this may also include chlorides, especially for austenitic steels. High-alloy stainless steels or nickel-based materials are used in this case, depending on the chloride content. At low pressures, plastics may also be used.

Starting up, venting and outgassing

Upon starting up the pump, it must be ensured that the suction line and pump working area are vented. Here, a start-up circuit can be provided, or the pump must be started without counter pressure on the discharge side. Special attention must be paid to fluids that split off gases such as oxygen. Hydrogen peroxide and bleach, the aqueous solution of sodium hypochlorite, are common examples of this. If such fluids are being pumped, split-off gas must be caught upstream from the pump in order to prevent a drop in volumetric efficiency or to prevent the pump from stopping as the result of high gas compressibility. There is a safety concern with fluids involving the split-off of harmful gases. One example is sodium hypochlorite, which creates in addition to oxygen (as mentioned previously) also chlorine and chlorine compounds as decomposition products.

4.2.2 The basics of piping calculation

This chapter covers a few basics of piping design and options for optimizing it. We will start by describing the criteria for installation design.

4.2.2.1 Operating criteria

To ensure trouble-free operation of a system with a reciprocating positive displacement pump, criteria must be met for preventing cavitation, overload and overdelivery.

Cavitation occurs if, at any point in the system, the pressure falls below the vapor pressure, causing fluids to evaporate. At points that have a higher pressure, the gas bubbles implode, which may result in damage to the surface of components. This is primarily a problem with centrifugal pumps, which are designed such that the lowest pressure occurs at the impeller. Cavitation occurring in reciprocating positive displacement pumps may lead to losses in volumetric efficiency, since the compressibility of the pumped fluid increases due to gas bubbles in the pump head. In these pumps, heavy cavitation may also lead to valve and pump head damage. Furthermore, severe noise generation can occur. When evaluating cavitation for reciprocating positive displacement pumps, the issue of partial cavitation must be taken into account. Due to the drive unit kinematics, the fluid that flows into the pump head accelerates during the first half of the suction stroke. Because of this acceleration process, it is possible for the gas bubbles to liquefy again before the end of the suction stroke, and as a result the pump head will be completely filled with liquid. In this case, despite the cavitation process, no volumetric efficiency is lost. This is referred to as "partial cavitation".

The measurement of volumetric efficiency loss can be used as a criterion for classifying cavitation, although no uniform specification is provided here. As an example, at the operating point where the minimum suction pressure is greater by the NPIPR than either the vapor pressure or the bubble point pressure, API 674 allows a 3% flow rate loss with respect to the cavitation-free flow rate while API 675 allows 5%.

As a secure method of cavitation prevention, a safety margin is usually required between the fluid vapor pressure and the lowest pressure occurring in the system. API 674 and 675 require a safety margin of 10% of vapor pressure. The NPSH or NPIP are frequently used for checking the safety margin. These values will be covered in greater detail in the next chapter.

To prevent overload, the maximum permitted pressure of the pump, the piping and all installations must never be exceeded. There are also no standardized specifications here for a safety margin between the maximum-occurring pressure and the set pressure of the safety valve. As an example, API 674 requires 5% of the average pressure as a safety margin between the maximum occurring pressure and set pressure of the safety valve, while API 675 requires 10%. Both guidelines, however, require at least 1.65 bar.

In rare cases of overdelivery, the suction pressure occasionally increases to more than the discharge pressure. Since the fluid valves of the pump are pressure-controlled, the suction and pressure valves open simultaneously in this case, and the pumped fluid flows through the pump head without being controlled. At this point, the pump conveys more than it is supposed to and precise metering is no longer possible. Excessive pumping can only occur at small pressure differences in combination with high pressure pulsations.

4.2.2.2 NPSH/NPIP

The suction side is checked using the NPSH or NPIP for each pump design.

NPSH

The abbreviation NPSH stands for "net positive suction head" and refers to a difference in pressure. This pressure difference is converted to the height of the corresponding fluid column of the pumped fluid. NPSH is usually specified in meters **m** or in feet **ft**. A distinction is made between the NPSHA value that is available on the suction side (net positive suction head available) and the NPSHR value required by the pump (net positive suction head required).

The NPSHA is determined on the pump flange and describes the differential pressure between the static process pressure there and the vapor pressure of the pumped fluid. It includes all static pressure losses between the suction tank and the pump, the pressure level in the tank as well as the geodetic height differences between the fluid level in the suction tank and the pump.

The pressure losses that occur during inflow into the pumps are summarized in the NPSHR. The NPSHR is determined by the pump manufacturer for a certain speed, a certain flow rate and a certain fluid.

It must be noted that the evaluation of the suction side using the NPSH only takes into account the static losses of the pumped fluid. This is sufficient for pump designs with constant flow rates. For operation, it must be ensured that the NPSHA is at least as large as the NPSHR in order to prevent a dramatic drop in flow rate or even damage due to pump cavitation.

The NPSH alone is not an adequate criterion for evaluating reciprocating pumps due to their pulsating flow rate. Furthermore, it is not adequate for evaluating hydraulically driven diaphragm pumps due to losses on the hydraulic side. Using the NPIP is more appropriate for a comprehensive review. It is described in more detail in the following section.

NPIP

The abbreviation NPIP stands for "net positive inlet pressure". The NPIP is similar to NPSH in that both describe a pressure difference. However, NPIP is not translated into a height, but is rather specified directly as pressure. The conventional unit for the NPIP is bar or psi. Similarly to the NPSH value, the NPIP distinguishes between an NPIPA value provided by the system (net positive inlet pressure available) and an NPIPR value required by the pump (net positive inlet pressure required). Both values are specified for the operating states on the pump flange.

The NPIPA value specifies the pressure difference between the vapor pressure and the lowest process pressure occurring during operation. In addition to static pressure losses, this also includes the dynamic pressure losses for the pumped fluid on the suction side.
The NPIPR value denotes the pressure difference relative to the vapor pressure necessary to ensure continuous operation without a drop in flow rate. In addition to pressure losses during inflow, this also takes into account possible losses on the hydraulic side of the pump as well as other phenomena which may affect the flow rate depending on the design of the diaphragm pump. The MRSP (minimum required suction pressure) is also frequently referred to in connection with the NPIPR. It is equal to the vapor pressure plus the NPIPR and is specified in terms of absolute pressure. The NPIPR or MRSP is determined by the pump manufacturer for a certain speed, a certain flow rate and a certain fluid.

For operation, it must be ensured that the NPIPA is at least as high as the NPIPR in order to prevent a dramatic drop in the flow rate and, in the worst-case scenario, to prevent damage to the pump due to cavitation.

An advantage of using NPIP instead of NPSH is that all losses are taken into account.

In a simplified analytic calculation, these pressure losses are divided into friction pressure losses and acceleration pressure fluctuation. Acceleration pressure fluctuation will be described in more precise detail in the following chapter "Fluid mechanics and design of piping". In Appendix E of API 674 and 675 a very simplified calculation model for acceleration pressure fluctuation is provided. The model defines factors for the pump kinematics and calculates the relative compressibility independently of fluid, temperature and pressure. Factor C, which accounts for the number of pump heads, also differs between API 674 and API 675. Calculation programs that calculate the kinematics of the respective pump and the compressibility of the respective fluid can provide better results.

Figure 4.6 depicts a suction-side pressure curve from an analytical simulation. The NPIP values can be read directly from the pressure curve.

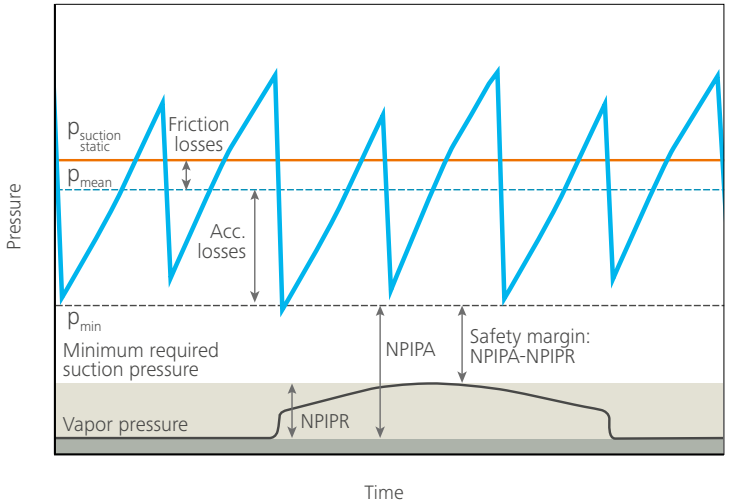

Figure 4.6: Calculated suction-side pressure curve

Numerical methods must be applied for a more precise determination of all pressure losses.

Improvement potential for suction-side conditions

The piping and/or pump must be optimized if the initial suction-side design cannot ensure that the NPIPA is always at least as high as the NPIPR.

The NPIPA can be improved by raising the general pressure level on the suction side. Options for this include a higher suction tank position, a higher liquid level, pressurization of the tank or installing a booster pump.

Reducing the pressure pulsation also helps to ensure an increase in the NPIPA. This can be achieved using pulsation damping devices such as gas-filled dampers or liquid dampers, which are described in more detail in chapter 4.2.2.4 "Methods for pressure pulsation damping", or by installing additional pump heads. Increasing the diameter of the installed piping lowers both the pressure pulsation as well as the losses between the tank and the pump, thus increasing the available NPIPA. Installing fittings with lower pressure losses also improves the NPIPA.

The NPIPR is a pure pump parameter, and can only be improved by changes to the pump. It may be possible to install a suction valve with a lower pressure loss. Installing a larger, slower-running pump that delivers the same flow rate may also help to lower the NPIPR.

4.2.2.3 Fluid mechanics and design of piping

This chapter summarizes a few select basic principles of fluid mechanics. The focus here is not on mathematical and physical rigor and detail, but instead on clarity. The point is to convey a basic understanding. Reciprocal influence of fluid movement on the piping system and vice versa is discussed. The values of pressure p and flow speed v will be placed in the foreground here. At the end of the chapter, an explanation is given for the context in which pressure pulsations and mechanical pipe vibrations occur.

Static pressure in the piping system

Static pressure is a result of the density of the fluid, the fluid column affecting the observed point and, where applicable, a superimposed static system pressure. We are looking at a piping system to which a tank is connected. Both the piping system and the tank have been filled with a fluid. The fluid has the density ρ. The fluid is not moving. There is a system pressure p_t on the fluid surface in the tank. The pressure p can now be calculated at any point in our piping network using the following equation:

$$p = p_t + \rho * g * \Delta h = p_t + p_{static} \quad (4\text{-}4)$$

The second term represents the static pressure p_{static}, where g represents the gravitational acceleration and Δh the height difference between the point where the pressure is being calculated and the fluid surface in the tank, as illustrated in figure 4.7.

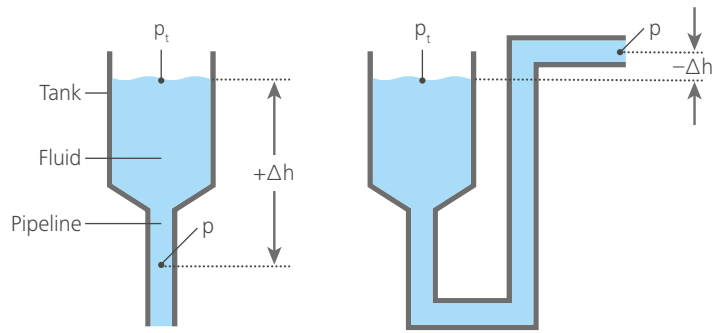

Figure 4.7: Static pressure in the piping system

If the liquid level in the tank lies above the reference point, then Δh is positive; i.e. the pressure in the piping system is larger by the amount of the static pressure. If the liquid level in the tank is lower, then the pressure decreases in accordance with the static pressure. Remarkable here is the fact that the piping diameter, the piping length and the piping routing have no influence on the static pressure. This means that the static pressure at the end of a vertical drinking straw is the same as the pressure on a vertical piping with the same height and a diameter of multiple kilometers! This phenomenon is generally called the "hydrostatic paradox".

Dynamic pressure in the piping system

The pressure in a pipe with stationary fluid and the pressure in a pipe with fluid moving at a speed v have different values. It can be observed that the pressure gets smaller as the fluid moves faster. The reason for this lies in the different kinetic energy levels of the fluid particles, due to a type of energy conversion.

- Increasing the kinetic energy results in a pressure reduction.
- Reducing the kinetic energy results in a pressure increase.

Simply put, a higher fluid speed "costs" pressure. The principle is based on the conservation of energy in a closed system, which is a pipe in this case.

The dynamic pressure losses $p_{dynamic}$ observed here have nothing to do with pressure losses based on dissipative effects (friction). "Pressure loss" in this case is a misleading designation, because it is not really a loss in the sense of an irreversible process.

In order to illustrate the dynamic pressure, we will take a look at a piping system with a connected tank. Since we only want to focus on dynamic pressure, we will choose a pipe routing layout in which there are no height differences. Otherwise, we would need to incorporate change in static pressure into our considerations, as described in the previous section.

We will once again denote the pressure in the tank p_t. We assume the flow speed of the fluid as steady, i.e. it should not change suddenly. The pressure at a certain position in the piping system with a steady flow speed v is thus determined as follows:

$$p = p_t - \frac{1}{2}\rho * v^2 = p_t - p_{dynamic} \quad (4\text{-}5)$$

This equation can be found in the literature as Bernoulli's principle. The second term is called "dynamic pressure". Now we will take a look at a location in the piping network where there is a change in diameter, see figure 4.8.

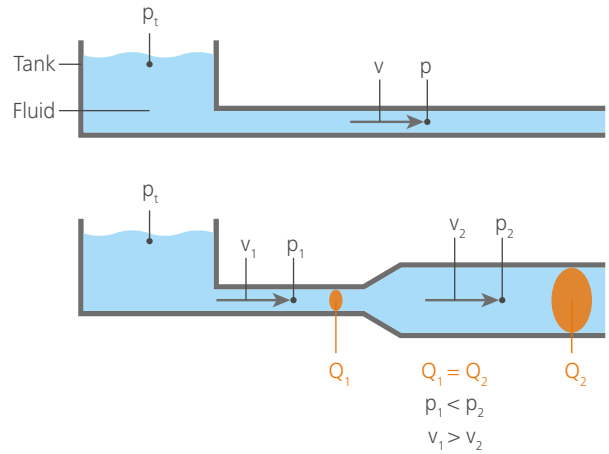

Figure 4.8: Dynamic pressure in the piping system

We assume that the inner diameter expands in the flow direction. According to the above principle (4-5), the pressure across the cross-section change will increase. This effect can be explained as follows: Because the flow rate $\dot{V}$ remains constant- otherwise, fluid would appear out of nowhere- the fluid speed at the change in diameter, i.e. the kinetic energy of the fluid particles, decreases. Because the total energy of the system is conserved, the pressure increases.

Acceleration pressure in the piping system

The previous section discussed the influence of the current speed on the pressure available in the piping network. Now we will take a look at the influence of a change in flow speed caused by, for example, a connected positive displacement pump. The flow kinematics of this type of pump result in fluctuations of the fluid velocity, the size of which depend on the construction of the pump. In the following section, we want to assume that the fluid in the piping system can follow the plunger movement instantaneously.

It should be noted at this point that the fluid in the piping system cannot follow the plunger movement instantaneously in reality. This assumption leads to incorrect predictions in the case of a long piping.

Pieces of pressure "information", including the piece of information that the plunger velocity is changing at a certain point in the piping network, propagates with the sound velocity of the fluid due to the compressible effects.

Let us assume that the sound velocity of the fluid is 1000 m/s (the sound velocity of water is approx. 1480 m/s under ambient conditions), and that we have a piping of exactly one kilometer in length. We will also assume that the plunger would be changing its velocity continually, which incidentally does happen during operation of the pump. The fluid particles that make direct contact with the plunger actually do follow its movement instantaneously. The fluid particles at the other end of the line would, in our assumed scenario, not "feel" that the movement state of the plunger has changed until one second later.

The "law of cause and effect" rules out the possibility that the entire "fluid column" can follow the plunger movements exactly as they happen. However, the shorter the piping, the more negligible this effect becomes.

Now we will take a look at a short piece of piping. Similarly to the previous sections, everything will take place at a single height level here in order to isolate the effect of the pressure fluctuation caused by the acceleration. Now we will imagine that the fluid column in the pipe is not moving.

According to the equations (4-4) and (4-5), the tank pressure found everywhere in the piping system is now p_t. Assuming the plunger of a reciprocating positive displacement pump is now set in motion, a force must act on each fluid particle to ensure that the fluid particles can also be set in motion. This force results from a pressure difference that arises during the acceleration process in the piping system. Since the "fluid column" of a reciprocating positive displacement pump is subject to not only acceleration but also deceleration, the pressure rises and falls with the plunger kinematics. At the beginning of the suction stroke, the pressure decreases rapidly and toward the end of the suction stroke, it increases rapidly. Thus, in the context of reciprocating positive displacement pumps the terms "acceleration pressure fluctuation" or "acceleration head fluctuation" are used. On the discharge side, the behavior of the acceleration pressure fluctuation is the inverse of that on the suction side. The acceleration pressure fluctuation is time-dependent and can be calculated with a pocket calculator for a single point in time. Therefore, at this point, only a formula is provided which can be used to calculate the current acceleration pressure p_{acc} in a pipeline segment of length l with a constant pipe cross-section at a defined point in time t.

$$p_{acc} = l * \rho * \frac{dv}{dt} \quad (4\text{-}6)$$

One of the major differences between centrifugal pumps and reciprocating positive displacement pumps is the fact that the contribution of the acceleration pressure for the centrifugal pumps is nearly zero. When reciprocating positive displacement pumps are used, however, the value of the fluctuation of the acceleration pressure can determine whether a pump conveys reliably or not, i.e. whether it could result in unwanted effects, such as cavitation or piping vibrations.

Dissipative effects in the piping system: friction pressure losses

In any piping system, friction effects will cause an irreversible conversion of kinetic energy (pressure) into thermal energy. This makes itself evident in the form of pressure losses. The simple fact that the fluid particles making direct contact with the pipe wall have virtually no speed makes it clear that adjacent "fluid layers" must have differing flow speeds in the longitudinal direction of a pipe segment. In a Newtonian fluid and, provided that the flow speed is relatively low and the viscosity relatively high, the profile of the flow speed takes the form of a rotating parabola. This type of flow is called a laminar flow and is depicted in figure 4.9.

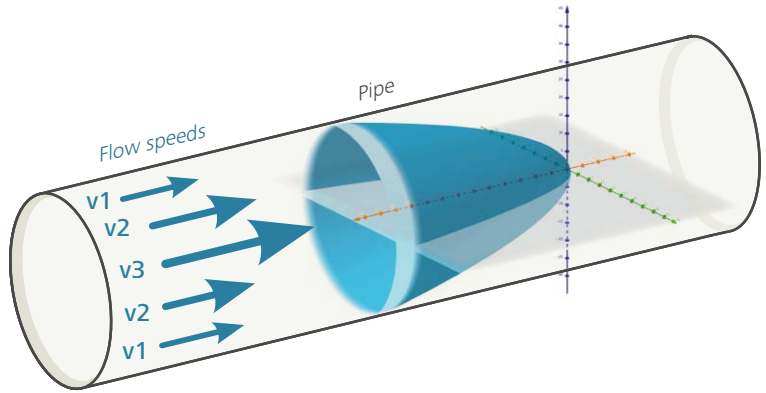

Figure 4.9: Laminar flow

The speed differences in a laminar flow allow adjacent fluid layers to "rub against each other" to create heat. These processes happen at the expense of the pressure.

What is pressure on a microscopic scale? In microscopic terms, every fluid consists of countless atoms and/or molecules. These microscopic particles all move in a disorderly fashion and with a certain statistical distribution of their speeds. If a fluid part runs into an obstacle, e.g. pipe wall, a momentum exchange takes place. This momentum exchange manifests itself as pressure on a macroscopic level.

At higher speeds, this flow profile breaks down and complex vortex structures are created in which energy also dissipates. This type of flow is called a turbulent flow.

If the speed remains constant, less friction is created in the turbulent flow profile than in the laminar flow profile. It can be clearly seen that many small vortexes create less friction than extended surfaces rubbing against each other.

The friction pressure losses $\Delta p_{friction}$ caused by the dissipative effects within the liquid must also be taken into account in the design of the pipe system. This is often carried out in everyday design situations by defining what is called a coefficient of friction ζ. This co-

efficient of friction can be approximated for a Newtonian fluid as a number that depends on geometric parameters. Friction pressure loss can generally be expressed as follows:

$$\Delta p_{friction} = \zeta * \rho * v^2 \quad (4\text{-}7)$$

Furthermore, the coefficient of friction can be defined for a wide variety of piping installations such as valves, filters, orifices, etc. Many of these values are tabulated in the literature.

Simple theoretical design of a piping system

The factors contributing to pressure changes in a piping system that were discussed in the previous sections can be used to create a simple formula that takes into account all described effects. In the case of short, i.e. a few meters long, and non-branching piping, a good estimate can be achieved for expected pressure fluctuations:

$$p = p_t + p_{static} - p_{dynamic} - p_{acc} - \Delta p_{friction} \quad (4\text{-}8)$$

To ensure trouble-free operation in a pump-piping configuration, the operating criteria described in chapter 4.2.2.1 "Operating criteria" must be adhered to, i.e. the vapor pressure must not be underrun and the maximum permissible pressure must not be exceeded.

In addition, the pressure fluctuation must not exceed a certain value. The magnitude of this permissible value depends on many factors, such as the piping cross-section and pump frequency. There are standards that provide recommendations for permissible pressure pulsations. More information on this can be found in chapter 4.2.2.5 "Pulsation analyses".

The larger the hydraulic output of a reciprocating positive displacement pump and the more complicated and larger the connected piping network, the more difficult it becomes to predict expected pressure pulsations. Here, additional non-negligible effects occur that are not included in the formula above. The mathematical representation of these effects is complicated and abstract, which is why we are omitting this math from the following sections and discussing the phenomena qualitatively instead.

The initial pressure peak

When pressure measurements with high time resolution are taken, you notice very high-frequency pressure fluctuations that subside quickly, especially close to the pump head. These are called the "initial pressure peaks". Their creation can be explained as follows: Due to the compressibility of the fluid, the valves at the pump head open with a certain delay. And once the valves are finally open, the plunger already has a certain amount of speed. Simply put, the plunger "collides" with the fluid column in the pipe. This coupling between the fluid in the line and the fluid in the pump head can be very hard and generates high-frequency pressure pulsations. The high-frequency pressure pulsations are dissipated more strongly than the low-frequency pressure pulsations. This results in the pressure peaks subsiding very quickly. Despite this, these peaks must be taken into account for the design because they may cause a pressure relief valve to respond unexpectedly, for example.

The above described effect was recognized by Nikolai E. Joukowsky and is described with the following simplified formula:

$$\Delta p = \rho * c * \Delta v \quad (4\text{-}9)$$

Here, c represents the wave propagation velocity, i.e. usually the sound velocity, Δv is the speed change and Δp is the resulting pressure shock.

Pressure resonance phenomena (acoustic resonances)

In the environment of the pump head, massive pressure fluctuations sometimes arise for a reciprocating positive displacement pump in ongoing operation. These pressure fluctuations can be thought of as a type of pressure wave with a complex shape that runs through the piping system at sound velocity. At installations, changes in diameter, branchings, closed ends and tank connection, these pressure waves are reflected, sometimes partially and sometimes completely, before running back in the opposite direction. Generally speaking, it is similar to an echo. A large number of such pressure waves run simultaneously through the piping system back and forth. If two pressure waves meet, this results in a superposition. This correlation is illustrated in figure 4.10.

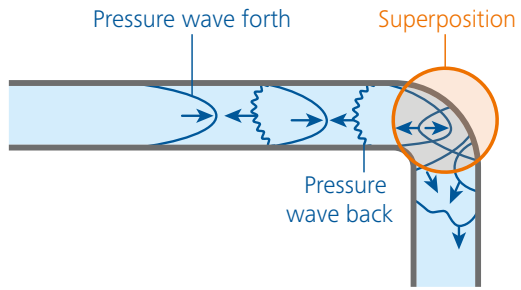

Figure 4.10: Pressure waves in the piping system

The pressure waves hitting each other can either amplify or attenuate each other. In other words, the pressure amplitude either increases or decreases due to the superposition. Depending on the sound velocity, the length of the piping, the installations included in

the system and the pump excitation frequency, the pressure fluctuation may "build up" at this point. This is referred to as "resonance". Enormous pressure amplitudes can be created and put the safe operation of a system at risk. Resonances can be eliminated through the suitable selection of damping devices, which are discussed in more detail in the next chapter, or the installation of restrictive orifices, which are very short pipe cross-section constrictions.

The relationship between pressure pulsation and piping vibrations

We previously described numerous effects and phenomena that cause pressure in the piping system to be subject to time-related and location-related fluctuations when reciprocating positive displacement pumps are used.

Pressure acts as a force on the inner wall of the pipe. The force at a specific location fluctuates in accordance with the locally present pressure pulsation.

In figure 4.11, for explanatory purposes, we see a U-shaped pipe that has both a right and a left bend. At each pipe bend, the fluid is redirected by 90°, which means that forces F_1 and F_2 act on each pipe bend, respectively. The force is equal to the pressure present at the location times the pipe bend cross section area. The resulting force F_{res} can be found by adding these two forces.

$$F_{res}(t) = F_1(t) + F_2(t) \quad (4\text{-}10)$$

Most of the time, both forces F_1 and F_2 will be different from each other. Sometimes the absolute value of F_1 is greater than the absolute value of F_2 and vice versa. Thus, the resulting force sometimes acts in one direction and sometimes in the other. As a consequence of this excitation, the pipe segment begins to shake back and forth.

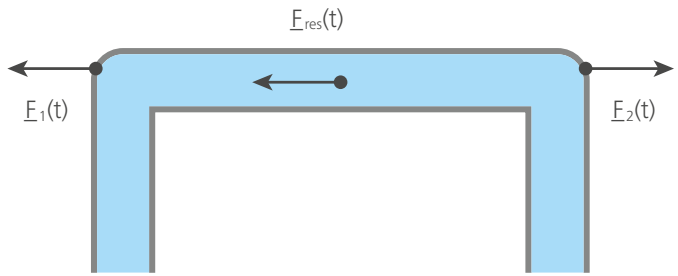

Figure 4.11: Fluid forces acting on the inside of a pipe

Piping and their supporting structures do not have unlimited rigidity. Instead, they have certain flexibility. They are, mechanically speaking, "oscillating systems" with defined characteristic frequencies. If the excitation frequency of the pump and a characteristic frequency of the system coincide, the system reacts with particularly large displacement. The characteristic frequencies depend on the type of support, the spacing between the supports, the pipe routing, the geometry and the material that the piping and supports are made of. The mechanical movement results in cyclical tensile and bending stresses. The stresses must not exceed specified limits, since fatigue failures are otherwise expected. There are standards and norms that specify maximum permissible stresses. State-of-the-art computer-assisted calculation models provide us with the option to calculate both the pressure fluctuations and the effect on the mechanical structures of the piping system. For more information on this, see chapter 4.2.2.5 "Pulsation analyses".

4.2.2.4 Methods for pressure pulsation damping

Pressure pulsations cannot be completely avoided during operation of a reciprocating positive displacement pump. However, numerous suitable measures and methods are available for reducing the pressure fluctuations to an acceptable degree in order to prevent any effects that would otherwise compromise safe and reliable operation. In general, the following options exist:

1. Limiting the pressure pulsation excitation caused by the pumps, e.g. increasing the number of pump heads
2. Enlarging the pipe cross sections
3. Preventing states of acoustic resonance by adapting the piping geometry
4. Installing damping devices with flow rate smoothing, dissipative, interfering or filtering properties

Possible damping devices are described in the following sections.

Flow rate smoothing damping installations

This class includes, for example, diaphragm dampers, bladder type dampers, air vessels and what is called the standpipe. Different damper types are shown in figure 4.12.

All options share the characteristic that they can periodically take in and then re-dispense a portion of the flow. The idea here is to bring the flow rate to as "smooth" a level as possible to ensure that, after passing the damper, as few pressure fluctuations as possible arise as a result of the variation of the flow rate over time. These relationships have already been explained in the previous chapter.

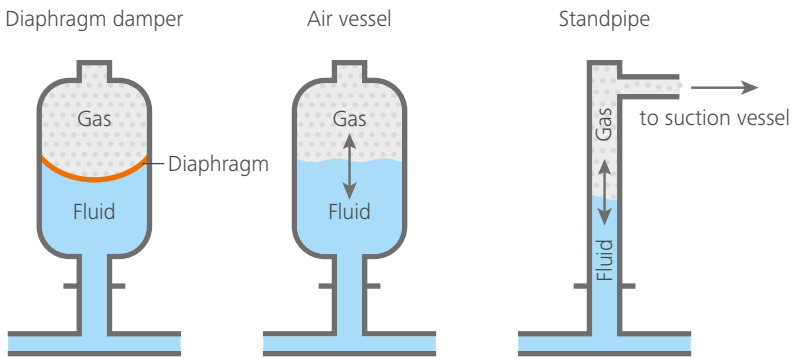

Figure 4.12: Damper types, schematic drawing

The upper part of the damper contains a gas, usually nitrogen, while the lower part contains process fluid. The damper should be located as close as possible to the pump and is connected to the piping. It is either flange-mounted with a T-piece or can have a flow running directly through it. The latter option almost always has better damping properties.

The mentioned gas-filled damper types all have the same working principle. The major difference lies in the separation of the liquid and the gas phase. In diaphragm dampers and bladder type dampers, the gas phase is separated from the liquid phase by a diaphragm or bladder, respectively, made from various types of polymers. These two damper types differ in terms of constructional design and the diaphragm or bladder material, which is chosen according the chemical reactiveness of the fluid. In an air vessel and a stand-pipe, there is no separation between the fluid and the gas phase. A standpipe has a connection from the gas phase to the gas phase of the suction vessel, meaning that the type of gas in a standpipe is the same as the one contained in the suction vessel.

The damper here functions as follows: The unsteady flow rate reaches the damper, at which point, the fluid can take one of two possible flow paths: either toward the piping leading downstream in the system or toward the gas phase in the damper, which would cause the gas phase to be compressed. The gas phase compression as well as the pressure losses in the downstream piping will impose a certain "resistance" on the fluid. The "resistance" of the gas phase against the incoming fluid volume V can be estimated using the polytropic equation:

$$p * V * \gamma = const. \quad (4\text{-}11)$$

It is assumed here that the gas phase undergoes a polytropic process. Gamma γ represents the polytropic exponent, which equals approx. 1.4 for nitrogen, for example, provided that pressures are not too high. Nitrogen is often used for filling the gas phase because it is inert and easy to obtain.

The fluid follows whichever flow path has the lower resistance at the time. The result is that a portion of the fluid will flow into the damper while the remainder of the fluid goes into the downstream piping. Upon inflow into the damper, the gas phase becomes compressed and the pressure increases in the damper, as illustrated in figure 4.13.

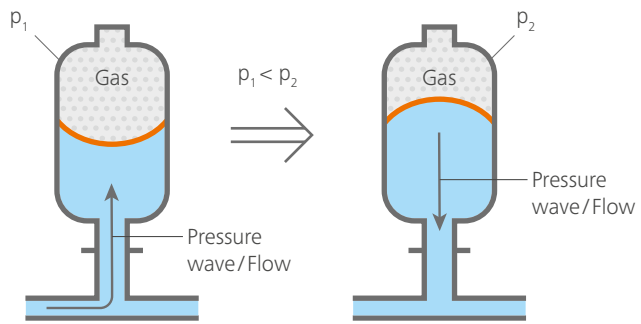

Figure 4.13: Functionality of a diaphragm damper, schematic diagram

After inflow of a certain volume of fluid, the pressure in the damper has risen to the point where no additional fluid is able to flow into the damper. This volume is then continually fed into the piping once the flow rate generated by the pump head diminishes again. This process "smooths out" the flow rate to a certain extent. The effectiveness depends on the volume of the damper, the size of the initial gas volume and the conditions at the inlet of the damper. The pipe-damper connection should cause as little additional pressure loss as possible, as doing so would additionally increase the "resistance" of the fluid for flowing into the damper. This is the reason why flow-through dampers, drafted in figure 4.14, are particularly effective. For this design, the entire flow rate is initially "forced" under the gas phase, often assisted by a baffle plate which redirects the flow. The installation of additional pressure losses, such as orifices, in the downstream piping near the damper allows the damping effect to be increased in many cases. One factor is that the dissipative effects, i.e. the friction pressure losses, generated at the orifice have a positive effect on the pressure pulsation damping and another factor is that, due to the higher pressure losses, the fluid will be "more inclined" to flow into the damper.

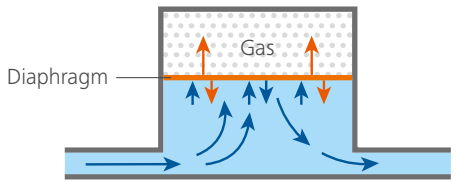

Figure 4.14: Flow-through diaphragm damper, schematic drawing

The pressure fluctuates at several frequencies at the same time, both high and low. The frequencies are essentially multiples of the pump stroke frequency. It becomes evident that the class of dampers just described is particularly effective in the lower frequency spectrum, especially if a damper has been placed on a T-piece, i.e. does not have a flow running directly through it. Furthermore, we can see that there is an upper limit volume above which the damping property no longer changes significantly.

One tremendous disadvantage of the gas-charged damper, however, is the fact that it requires maintenance. The "pre-charge pressure", which determines the volume of the gas phase, must always be adjusted according to the piping pressure. In addition, diaphragm dampers and bladder type dampers are subject to the risk of material failure due to aging and/or improper operating conditions. The diaphragm or bladder may be damaged. For the damper types without separation of liquid and gas phase, gas is continuously released from the gas phase in the fluid and gradually delivered from the damper. The loss must, therefore, be compensated for through continuous refilling. The amount of gas dissolved in the liquid depends on the type of liquid and the operating pressure. The higher the operating pressure, the more gas is dissolved. Therefore, dampers without separation of the liquid and the gas phase are usually employed on the suction side.

Liquid damper

A liquid damper is nothing more than a volume filled with the conveyed fluid which has a much larger cross-section than the connected input and output piping. The shape is usually spherical or cylindrical, as shown in figure 4.15. In some cases, the inside of the liquid damper contains additional installations, such as perforated disks or baffle plates.

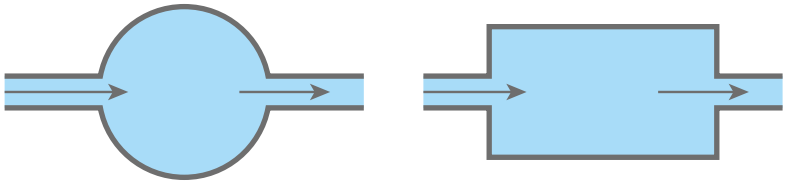

Figure 4.15: Liquid dampers, schematic drawing

The pressure pulsation damping effect is based on numerous effects that we will discuss in the following section. Some of these effects are dissipative effects, i.e. effects relating to friction pressure losses. Other effects relate to the reflections of pressure waves on the inside of the liquid damper and an effect, even if only very small, results from the compressibility of the large fluid volume on the inside of the liquid damper. However, a fluid volume can be compressed orders of magnitude "harder" than a gas volume.

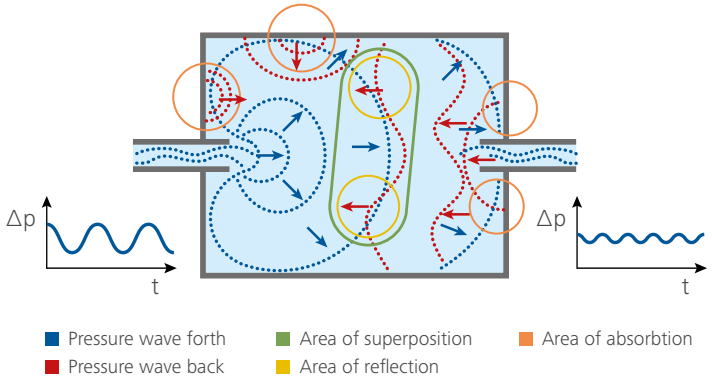

Figure 4.16: Liquid damper, functional diagram

As illustrated in the previous chapter, pressure waves created at the pump head propagate through the piping system. Now imagine a type of "slice" of a pipe cross-section, a flat wave front, where the same pressure level is present across the entire surface. In a pipe with an unchanged cross-section, this wave front travels onward almost unaffected. However, when it enters the liquid damper, this wave front spreads in the shape of a half-sphere and the pressure on the wave front decreases. It "swells" and becomes "thinned out". It is similar to when a balloon is inflated but also involves the wall getting thinner at the same time. As soon as the "swelling" surface touches the edges, the parts coming into contact with the liquid damper wall are reflected and move in the opposite direction. They overlap with other parts of the surface and collide with the wall or installed components. Thus, the overlapping of the pressure waves becomes quite chaotic, and the pressure waves overlap from entirely different directions, resulting in the effects of reflection, superposition and absorption. These correlations are depicted in figure 4.16.

Only a small portion of the originally swelling wave front actually reaches the liquid damper exit unaffected. The pressure there is less, as already mentioned. Other parts of the original wave front do not escape from the liquid damper due to numerous deflections, i.e. they are ultimately dissipated. The liquid damper thus has something resembling a filtering property. A second mechanism of action is based on the fact that, upon inflow and outflow, vortex structures are created. These result in dissipative effects that have a positive effect on the damping.

An extreme form of the phenomenon described above can be observed at throttles. Throttles are usually configurable narrowing points at which pressure loss is generated. Upon correspondingly strong throttling, the pressure pulsation behind the throttle decreases significantly.

The two major advantages of a liquid damper are its maintenance-free quality, which is of particular interest for changing operating pressures because the liquid damper does not need pre-charging, and its lack of wear, provided that material selection and operation are both carried out properly. In contrast to the damping types described in the previous section, a liquid damper proves to be more effective particularly in the upper frequency spectrum, i.e. primarily for high-speed multiplex pumps. To ensure that the liquid damper also fulfills its function in the lower frequency spectrum, its design must be so large that it is often not economical. Similarly to the gas-filled dampers, the damping effect can be amplified to a certain extent through the use of restrictive orifices. Figure 4.17 shows the damping behaviors of the different damper types qualitatively.

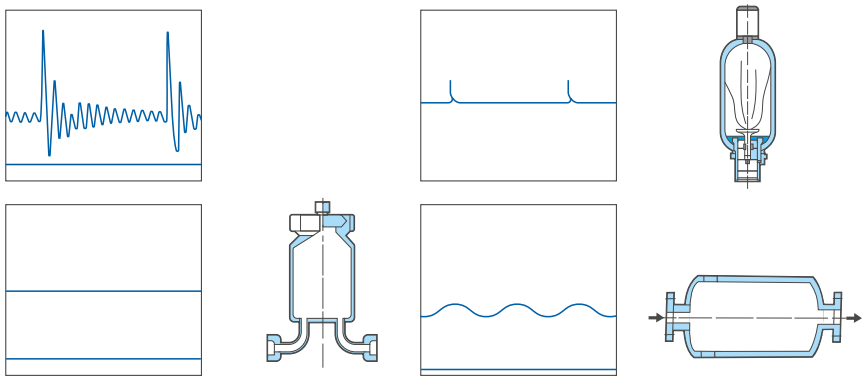

Figure 4.17: Pulse developments for different damper types

4.2.2.5 Pulsation analyses

In order to ensure reliable pump operation in the system, a so-called pulsation study can be carried out already in the planning phase. Precise calculation allows operating problems such as cavitation, excessive pressure pulsations and fatigue damage to piping and components to be prevented.

API 674 3rd edition, Annex C is most frequently used as a guideline for carrying out a pulsation study for reciprocating positive displacement pumps. The description in API 675 3rd edition, Annex F, is only slightly different. An additional guideline is API RP 688 1st edition. Here, a few basic principles for pulsation studies calculation approaches are described. Particular focus is placed upon differentiating between acoustic and mechanical analyses. Theoretically, API RP 688 refers to all types of reciprocating positive displacement machines. The 1st edition, however, focuses primarily on reciprocating compressors. A 2nd edition is being prepared, which will focus also on reciprocating positive displacement pumps in greater detail.

Design approaches

Many factors need to be taken into account to determine whether a pulsation study is necessary and what calculation approach is to be used. These include the hydraulic output of the pump, the stroke frequency, the complexity of the network as well as critical process conditions or experience with similar installations.

API guidelines 674 and 675 differentiate between design approaches 1 and 2. For approach 1, in-house and/or empirical analytic calculation methods are permitted, whereas approach 2 requires a tried and tested acoustic simulation model. Both approaches also require a mechanical check for the piping system, but approach 2 additionally requires that the shaking forces be calculated.

Design criteria

Many factors need to be taken into account to determine whether a pulsation study is necessary and what calculation approach is to be used. These include the hydraulic output of the pump, the stroke frequency, the complexity of the network as well as critical process conditions or experience with similar installations.

For the maximum permissible peak-to-peak pressure pulsation Δp, API 674 specifies a criterion in the frequency range depending on the inner pipe diameter. Thus, the entire frequency spectrum of the calculated pressure-time curve, i.e. all harmonics of the pump stroke frequency, must be determined for checking the criterion. Figure 4.18 uses a 3" diameter as an example to show the maximum permissible pressure amplitude as a function of excitation frequency:

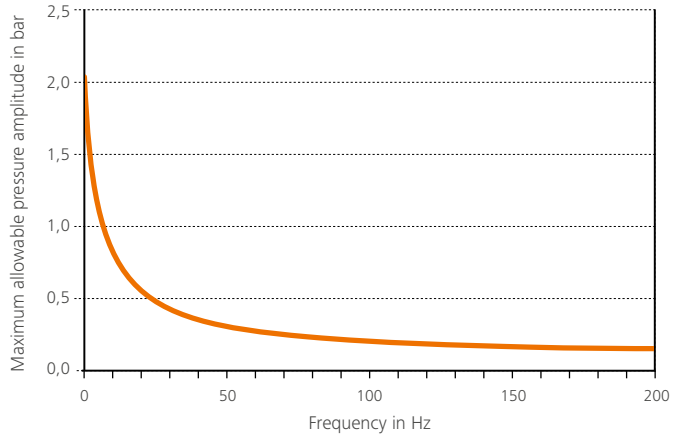

Figure 4.18: Maximum permissible pressure amplitude for a 3" diameter as a function of excitation frequency, in accordance with API 674/675

In addition to the maximum pressure pulsation, the previously described safety margins from the vapor pressure and from the setting pressure of the pressure relief valve must be observed (see chapter 4.2.2.1 "Operating criteria").

The guidelines do not contain any criteria for the permissible shaking forces of reciprocating positive displacement pumps. API 618 5th edition, section 7.9 defines a criterion for reciprocating compressors depending on the frequency, the pipe diameter, the structural stiffness and number of supports.

Pulsation analyses can also be carried out in accordance with customer-specific operating criteria.

Mechanical analysis

For the mechanical check of the piping network, API 674 requires a span length calculation. The theoretical basis for this calculation approach is the fact that each piping section, i.e. the distance between two supports, has a natural frequency depending on its diameter. This natural frequency must never coincide with the excitation frequency of the pump. This is why, for every diameter that occurs in the network, a maximum permissible span length between supports is to be calculated which has a natural frequency at least 20% greater than the maximum excitation frequency of the pump for the dominating harmonic. API 688 5th edition contains calculation methods for the natural frequencies of the piping under section 3.2.7.2.1. They can also be found in EDI Report 41450.

Pipe supports

In order to avoid vibrations, it must be ensured that the correct pipe supports are used. The Energy Institute provides a few guidelines in the publication "Guidelines for the Avoidance of Vibration Induced Fatigue Failure in Process Pipework", such as avoiding pipe bends to the greatest extent possible and attaching supports at heavy masses as well as near pipe bends. Rest and guide supports should be avoided because they cannot absorb dynamic forces. To ensure the ability to limit displacement, pipe supports must be "dynamically fixed". Piping is considered dynamically fixed in one or more directions of movement and/or rotation if the support is capable of absorbing dynamic loads without allowing any movements relative to the support construction. This also means that no clearance is permissible between the piping and supporting construction. Rest type weight supports are therefore not an appropriate choice for piping systems subject to dynamic loads. The two technical solutions that can allow thermal expansion but prevent dynamic movements are clamp type support and hold down support. For absorbing dynamic forces, it must be ensured that the friction forces between the pipe support and the structure on which it is mounted are always greater than the shaking forces caused by the pressure pulsation.

Examples of clamp type supports and hold down supports can be found in API 688 5th edition in sections 3.2.7.9.1 and 3.2.7.9.2.

Caution is advised for connections with small diameters, which are often part of vent and drain pipes. Instructions for how to install these are found in API 688, Section 3.2.6.6. It is of crucial importance here to install overhanging masses close to the main pipe and to fasten them there.

4.3 Instrumentation and control engineering

4.3.1 Instrumentation

In the process engineering industry, the pump itself is never used alone.

Instruments for recording the following parameters are used:
- Flow rate
- Pressure (suction and process pressure)
- Temperature (process, pump drive unit, etc.)
- Level (tank, pipeline, etc.)
- Media analysis, e.g. density, concentration

When selecting instruments, it is important to select the economically sensible and technically sufficient instrument.

In addition to the instrument cost, the following aspects must be considered in this process:
- Customer specifications
- Physical state of the substance to be measured (liquid, gas, or mixture)
- Pressure
- Temperature
  - of the substance to be measured
  - of the environment
- Ambient conditions
- Density of the medium
- Viscosity of the medium
- Abrasiveness and corrosiveness of the medium
- Conductivity
  - Measuring instruments for conductive liquids are often less expensive while offering the same accuracy, since these are frequently used in waste water technology.
- Required measuring accuracy and reproducibility including measuring dynamics
- Process connection
- Mechanical requirements such as inlet run, installation position, etc.
- Potentially permissible pressure loss (for flow meters)
- Current (flow), flow speed, and turbulence
- Service life and failure probability

Furthermore, reliability, process safety and, finally, personal safety become more and more important. Newly developed instruments are evaluated in accordance with SIL (Safety Integrity Level based on the IEC 61508 standard) and usually developed from the beginning to meet SIL2 or even SIL3 regulations.

Monitoring mechanisms to ensure the correct measured value will be incorporated more and more into measuring instruments, and thus make the entire process more secure and more reliable. Examples of these mechanisms include adhesion monitoring for flow meters, the comparison of the current measuring behavior to the original behavior for Coriolis flow meters, and more, in other words, self-monitoring of the measuring instrument.

4.3.2 Process control

Certain processes, such as foam extrusion, require very precise control that is as fast and easy as possible.

This is realized using either PID controllers or, nowadays, using an increasing number of programmable logic controllers (PLC) with PID control or characteristic curve control.

A PLC offers the advantage of flexibility, as well as a multilingual user interface and a connection to higher-level systems over a bus system or through the conventional method using analog and digital signals.

General control principle

For both systems, the flow rate is monitored by the controller or the PLC. The signal received from the control system is sent to the controller over a bus system or using the conventional method of a 4-20 mA signal as a reference value. The flow rate is measured by the flow meter installed in the discharge line. The outgoing signal is sent to the controller as an actual value. The controller continually runs a setpoint/actual value comparison. If a control deviation occurs, then the speed of the controllable pump motor is immediately changed using a frequency inverter, causing a constant adjustment of the flow rate. As an alternative to the frequency inverter, control can also be carried out using an electric or pneumatic stroke adjustment or a combination of a frequency inverter and a drivable stroke adjustment.

How PID control differs from characteristic curve control

In the case of characteristic curve control, the pump characteristic curve is also provided to the controller upon system start-up. This gives the controller the option to calculate the manipulated variable for the frequency inverter or the stroke adjustment in advance, and to specify this calculated value of the manipulated variable as the starting value upon start-up of the control system or upon specification of a changed setpoint.

After the start-up of the actuator (frequency inverter/stroke adjustment), the PID control system is then activated for adjusting the exact setpoint. This way, the setpoint is reached more quickly and without being severely overshot. The step response time is usually less than one minute, i.e. the specified setpoint is reached within one minute with a deviation of less than 1% of the specified value.

In addition, the characteristic curve controller is able to compare the actual value of the flow meter to the stored pump characteristic curve to determine whether the measurement is plausible. If a comparison value is not plausible, a message can be issued. This type of control is referred to as a self-monitoring system.

If the pump is adjusted through manual stroke adjustment, then the characteristic curve control can be influenced as follows:
- Manual switch-off, at which point operation continues with PID control.
- Entering new values for the characteristic curve, at which point control continues normally with the new values.
- Independent, adaptive recognition of a characteristic curve deviation by the control system, at which point the system switches to PID control independently and registers the recalculated characteristic curve internally.

Additional integrated standard monitoring systems

A PLC can use pressure switches, contact pressure gauges, or pressure transmitters to monitor suction pressure and discharge pressure.

The monitoring of suction pressure is used to avoid pump cavitation and the monitoring of discharge pressure is used for system protection in addition to mechanical monitoring components such as overflow valves and pressure relief valves. If the preset maximum discharge pressure is exceeded, the pump is stopped, preventing the opening of the internal pressure relief valve.

Production data acquisition

Production data acquisition of figures such as operating hours, flow rates in combination with a flow meter, and flow rate per day/week/month can also be integrated and transferred to a higher-level control system over a bus system.

Actuator data (e.g. of the frequency inverter, motor, or stroke adjustment) can also be transferred to the PLC or to a control system and analyzed. This type of analysis can then be used for preventive maintenance.

Expansion to the process system

For more complex fluid-related tasks, it is possible to expand the control algorithm through the addition of functions such as recipe management, fluid analysis, complex mixing processes, and temperature control.

Remote maintenance

Upon request or where more complex metering tasks are applied, it is also possible to equip the PLC with remote maintenance over internet/ethernet, turning it into a remote maintenance router. This allows the on-site commissioning to be supported by experienced commissioning personnel from the manufacturer's headquarters.

To prevent unauthorized remote access, a secure VPN tunnel (virtual private network) is established using a remote maintenance router. This is carried out from the system side, i.e. the customer establishes the connection. The security can be increased by installing an additional manual on-site operation function, such as a key-operated switch, for enabling or disabling the remote access.

Diaphragm rupture monitoring

Standard diaphragm rupture monitoring systems can be designed as follows:
- Purely visually using a pressure gauge
- Electromechanically using pressure switches or contact pressure gauges, with a fixed trigger value
- Electronically using pressure transmitters and an adjustable switching threshold

There is also an option for adaptive diaphragm rupture monitoring using a solenoid valve in the case of diffusing fluids. A pressure transmitter can thereby be evaluated as follows:

- Good condition:
  - Pressure does not rise, or rises only slightly but continually. After a configurable threshold, the pressure is released into the safe area using a solenoid valve. A maximum rise time can be specified as "normal case".

- Case of error:
  - Pressure rises very quickly and strongly; diaphragm rupture with alarm trigger. A rise time "diaphragm rupture" can be specified.
  - Pressures of multiple heads of a multi-headed pump increase for the same fluid at different speeds; the operator can adapt this previously unidentified warning using a parameter to turn it into an error with or without switch-off, or into a good condition with pressure release via solenoid valve.
  - Pressure does not rise only slightly, as would be assumed and as was conventional thus far, but does not rise suddenly either; the operator can adapt this previously unidentified warning using a parameter to turn it into an error with or without switch-off, or into a good condition with pressure relief via solenoid valve and the output of a message.
  - Pressure does not rise at all, even though the pump is conveying; the operator can adapt this previously unidentified warning using a parameter to turn it into an error with or without switch-off, or into a good condition.

- Opening and closing the solenoid valve manually is always possible.

Batch control

Batch control is a modification of process control with respect to a certain filling task. Multiple variants of this modification are available:

The first is a simple, cost-effective version that counts only the pump strokes; a flow meter or a scale can be omitted. The control system calculates the necessary number of pump strokes on its own using the stored stroke volume. If the stroke volume of the pump head is changed by moving the stroke adjustment, then a calibration function can be used to define the new stroke volume.

The second version uses the mechanisms of process control via the flow meter or scale and frequency inverter and/or electric or pneumatic stroke adjustment. Here, the conveyed fluid volume is determined and filled with precision. The filling precision and flexibility are both higher than those of the cost-effective version.

The third version is based on knowledge of the process and pump, and calculates the stroke volume. For this purpose, process data such as process pressure and motor data are taken into consideration. As with the first version, this version can omit a flow meter and a scale.

4.3.3 Condition monitoring systems

Condition monitoring systems (CMS) optimize the performance and service life of machines and systems and increase their availability.

Condition-based and preventive maintenance improves the efficiency of machine and system operation. The costs of production failures are reduced thanks to early detection of damage, damage diagnostics, and predictable downtimes. This means that components do not need to be replaced until their conditions actually require it. Condition-based maintenance replaces interval-based maintenance here, which was previously the standard procedure.

It is even possible to use information to build up databases with content relating to operating hours, load profiles, logbook functions for previous maintenance measures, etc. for the purpose of later evaluation or use in the context of future product developments.

In addition, all relevant system and machine information is also made available to higher-level information systems, where it can be used for further calculation and evaluation with other production/process components.

In general, the following questions must be considered for implementing a condition monitoring system from the perspective of the user and of the system integrator:
- Which functions of the respective machine or system are necessary for condition monitoring?
- Where is the necessary information gained and how is it generated, transmitted, evaluated, and interpreted?
- In what ways can the data for machine diagnostics be aggregated and linked?
- How can condition monitoring systems be classified in the automation pyramid from the Open Systems Interconnection Model, and how should the data/communication flow be defined?

Condition monitoring on diaphragm pumps

The general system approach consists of differentiating between good condition, defined through calibration of the normal operating state, indications of initial minor faults, and severe faults.

In the event of minor faults, further operation is still possible but may involve output losses for the metering pump. In general, however, this condition indicates the early stages of wear. The yellow warning level as shown in figure 4.19 has been reached.

Severe faults, on the other hand, only permit further operation in exceptional cases and are signaled by the red alarm level.

This approach allows all significant potential faults to be recognized early in the diaphragm pump.

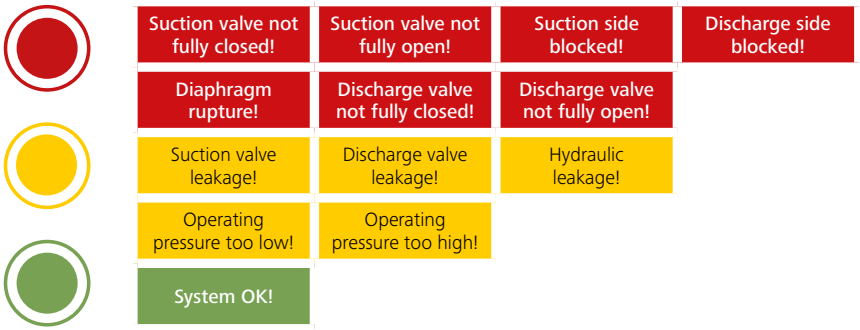

Figure 4.19: Exemplary overview of typical faults

Measured values of the condition monitoring system, also illustrated in figure 4.20, are:
- Solid-borne sound on the diaphragm pump head
- Pressure in the hydraulic chamber of the diaphragm pump (advantage: no contact with the conveyed fluid)
- Rupture detection by pressure measurement of the diaphragm intermediate layer for sandwich diaphragms
- Detecting the displacer position

The combined analysis of solid-borne sound and pressure signals monitors 90% of the possible failures.

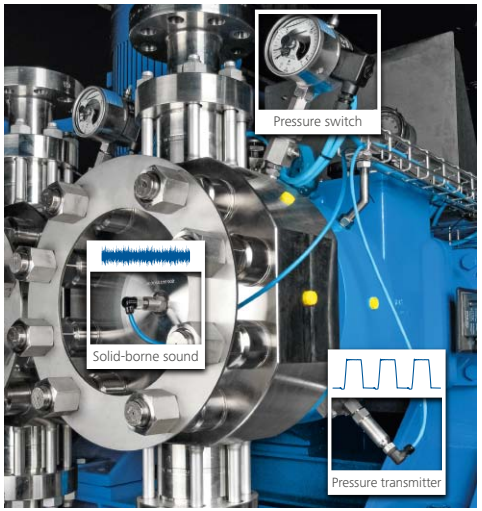

Figure 4.20: Measured values of a condition monitoring system

The detected values can be used to determine the following state variables through further processing and corresponding modeling:

- Hydraulic leakages (valve malfunctions)
- Function of the fluid valves (leakages of the process valves, valve wear)
- Component failure
- Condition of the sandwich diaphragm, which keeps operating reliably and remains hermetically tight for a limited amount of time, even in case of failure of the first layer.

Figure 4.21 shows the positions of the respective components.

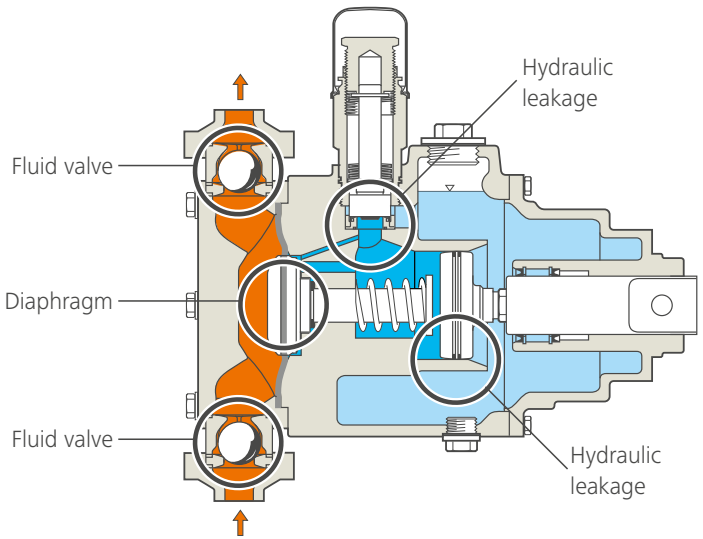

Figure 4.21: State variables of a condition monitoring system

Indicator diagrams show the pressure versus time curve in the hydraulic chamber. Figures 4.22 and 4.23 show indicator diagrams, measured in the diaphragm drive of the diaphragm pump.

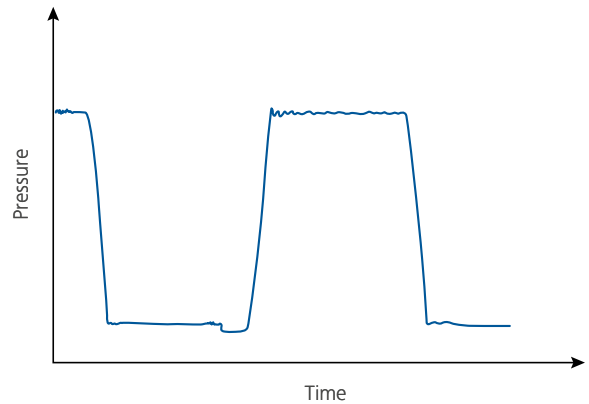

Figure 4.22: Recording of "good condition"

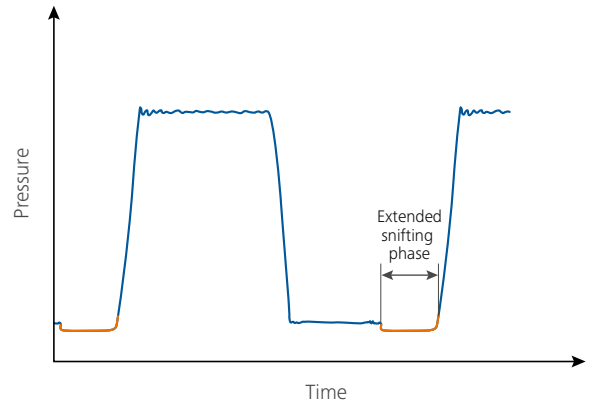

Figure 4.23: Hydraulic leakages

Hydraulic leakages are identifiable by changes in the snifting range.

Fluid valve leakages are determined by solid-borne sound measurements. Figure 4.24 shows the comparison of the reference signal with the signal of the defective valve.

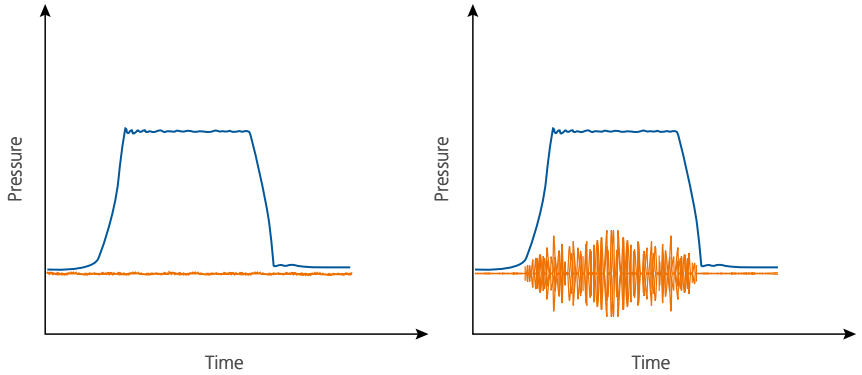

Figure 4.24: Solid-borne sound diagrams for monitoring the fluid valves

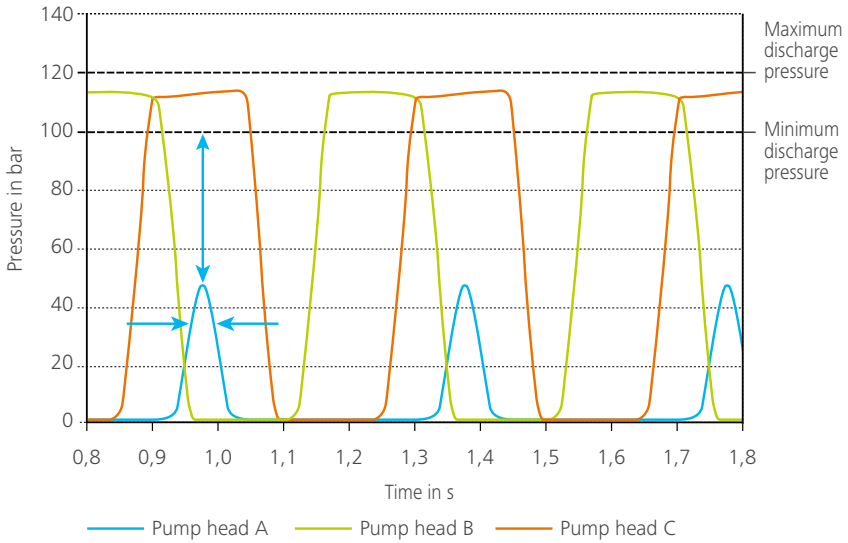

Figure 4.25: Pressure curve of a three-headed pump with a defective suction valve at head A

Displayed in figure 4.25 is the case of failure in which the measured discharge pressure at head A is lower than the minimal discharge pressure, due to a defective suction valve which doesn't open.

4.3.4 Synchronization

Many production processes require 24/7 availability with high failure security. An identical spare pump is often kept available in standby and only switched on in cases of failure.

If two or more identical speed-controlled pumps are being used for one process, then it is often practical to synchronize these pumps.

Upon synchronization, the pumps (often process pumps) are operated with a defined phase shift with respect to the pump stroke frequency to ensure a smooth volumetric flow. For example, two three-headed pumps operate like one six-headed pump with a defined phase shift of 360°/6 = 60°. This allows the pulsation to be considerably reduced, as shown in figures 4.26 and 4.27.

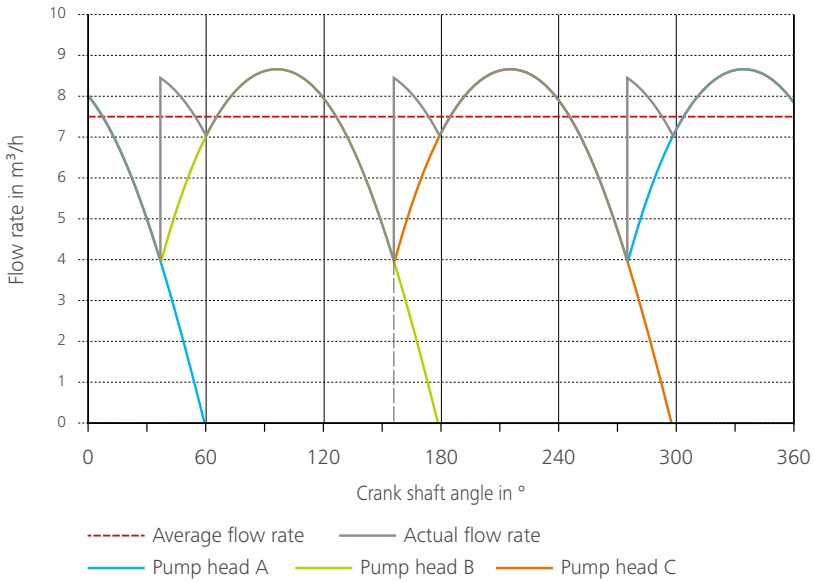

Figure 4.26: Theoretical volume flow pulsation of a three-headed pump

Figure 4.27 shows the theoretical volume flow pulsation of two synchronized three-headed pumps with a phase shift of 60°, assuming identical flow rate as the pump in figure 4.26.

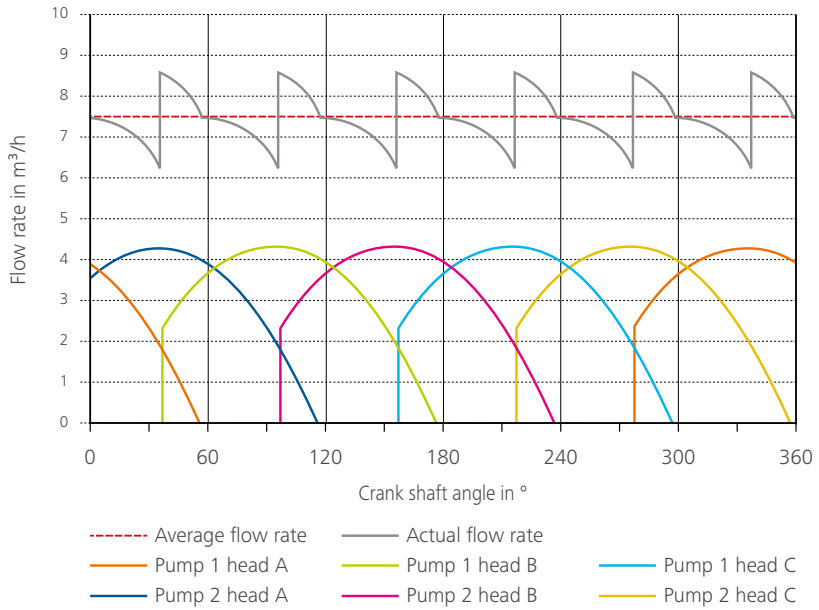

Figure 4.27: Theoretical volume flow pulsation of two synchronized three-headed pumps

The flow rate control is carried out for multi-headed pumps using the synchronization control.

The synchronization can further provide a flexible maintenance concept, which allows any pump to be removed from the system of synchronized pumps at any time. The synchronization control system distributes the flow rate to be pumped over the remaining pumps, without exceeding the maximum flow rate of the pumps. It is also possible to put a pump back into the system at any time.

This system allows avoiding production downtime during maintenance of one pump or even in the case of failure of one pump. If a true "standby" pump would have been used, it would have to go through a time-consuming start-up process. This process is eliminated here, since during synchronization, the pump only has to be adjusted in terms of speed.

In addition, selective variations in the phase shift allow resonance points to be bypassed by the synchronization control system.

4.4 Control of fluid kinematics

The developments in drive technology and particularly in the area of motion control, i.e. position control with subordinate speed and current control, allow the adjustment of flow rate curves on diaphragm pumps contrary to their "natural" sinusoidal curve.

Highly dynamic servomotors are used here in order to achieve high acceleration and deceleration values for rotary movement.

They have been designed as permanent-magnet synchronous motors with integrated rotary and position sensor technology, which, in contrast to other conventionally asynchronous machines, have an outstandingly low mass moment of inertia in addition to their compact designs without fans.

Through these drive systems and the corresponding application-oriented programming, the time curve for the position of the pump displacer can be controlled, thereby making a direct impact on the flow rate curve over time.

This opens up new applications and processes using diaphragm pumps.

Low-pulsation metering

A common and cost-effective method for reducing pressure and flow pulsations in systems and installations is to use pulsation dampers, which work simply and effectively given the appropriate coordination of the damper volume and the charging pressure.

Under certain prerequisites, the possibility also exists to establish low pulsation by avoiding pulsating flow rates as early as in the diaphragm pump. Thus, changes to the process pressures of the system then have fewer negative effects, since the coordinated system between the pulsation generator and damper does not need to be adapted by changing the charging pressure.

The velocity of the displacer of a diaphragm pump is kept constant in wide areas during the discharge stroke phase and synchronized with a second pump of the same function, in such a way that the two flow rates of the individual pumps create one superposed and pulsation-free overall flow rate.

The differences between constant and variable rotation angle velocity at the eccentric shaft are shown in the next two diagrams below.

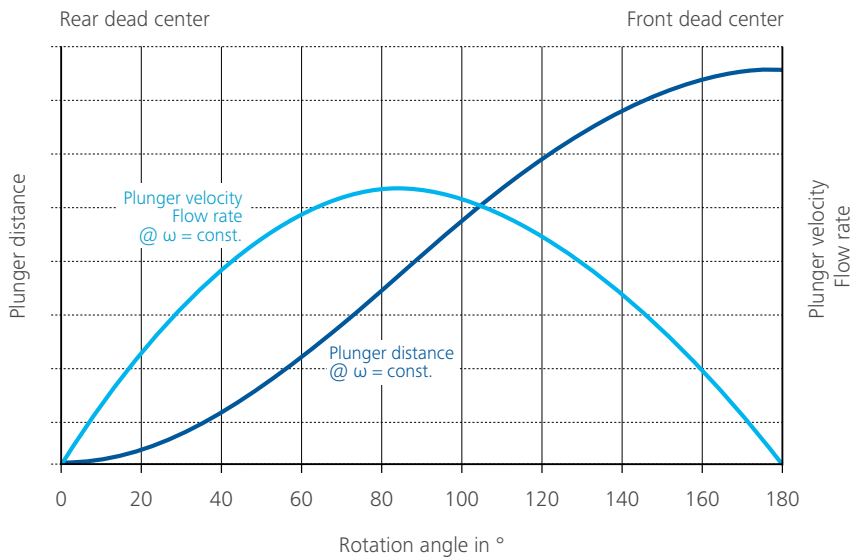

Figure 4.28: Protocol for plunger distance and plunger velocity at constant angular velocity of the motor shaft on the discharge side

Figure 4.28 shows the plunger distance and the plunger velocity for a straight crankshaft drive unit during the discharge phase with a constant rotation angle velocity ω on the drive side.

The flow rate $\dot{V}$ is proportional to the plunger velocity v_p in accordance with the equation (4-12).

Because the time curve for the plunger velocity thus corresponds to the time curve for the flow rate of the fluid being pumped, it follows that controlling the plunger velocity can have direct influence on the delivery characteristics of the metering pump.

$$\dot{V}(t) \sim v_p(t) \quad (4\text{-}12)$$

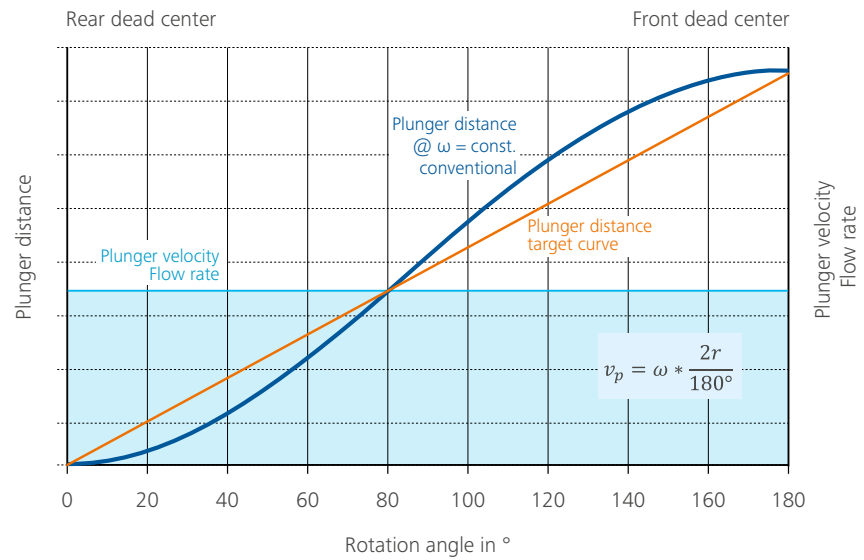

Figure 4.29: Plunger distance and target plunger velocity on the discharge side

Figure 4.29 shows the flow rate curve, and the plunger distance increasing linearly at the specified constant plunger velocity. The curve of the conventional plunger distance at a constant rotation angle velocity is displayed for the eccentric shaft for comparison.

The target motion profile on the drive side then results from the straight crankshaft relation as the correlation between the rotation angle of the eccentric shaft and the plunger distance.

The rotation angle results from equation (4-13)

$$\varphi(s_p) = \arccos\left(-\frac{1}{\lambda} + \sqrt{1 + \frac{1}{\lambda^2} - \frac{2}{\lambda}\left(\frac{s_p}{r} - 1\right)}\right) \quad (4\text{-}13)$$

In this instance, $s_p(\varphi)$ is the plunger distance, r the current eccentric offset, φ the rotation angle of the eccentric shaft and λ the thrust rod ratio. The thrust rod ratio is calculated using the eccentricity R and the connecting rod length l as follows:

$$\lambda = \frac{R}{l} \quad (4\text{-}14)$$

Trapezoidal linearization

In order to reduce high plunger accelerations at the front and rear dead centers, the velocity curve at these reversal points is given suitable velocity ramps.

Additionally, the two pumps are synchronized with each other by overlapping the ramp sections of the two pumps in such a way that the resulting flow rate corresponds to that of a steady-state flow rate, see figure 4.30.

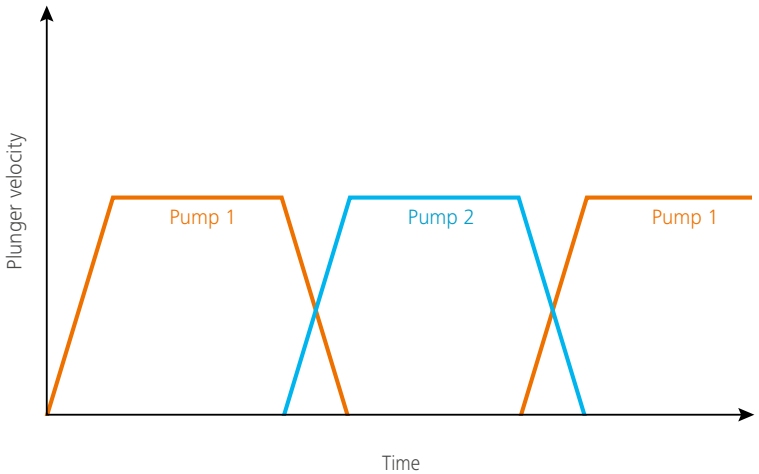

Figure 4.30: Trapezoidal linearization and synchronization of two pumps

To ensure the ability to handle actual situations that arise in practice, the flow rate ramps are kept variable in their length and slope, as shown in figure 4.31.

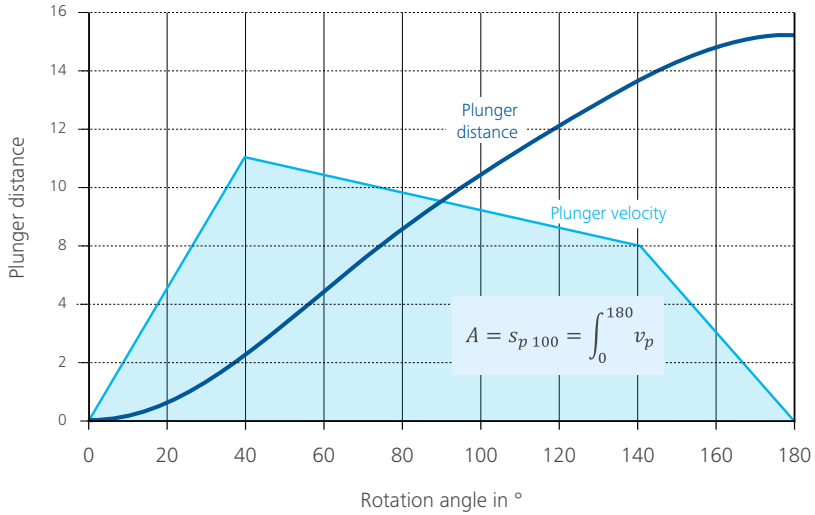

Figure 4.31: Trapezoidal linearization

The result of a real flow rate curve is represented in the exemplary plot in figure 4.32.

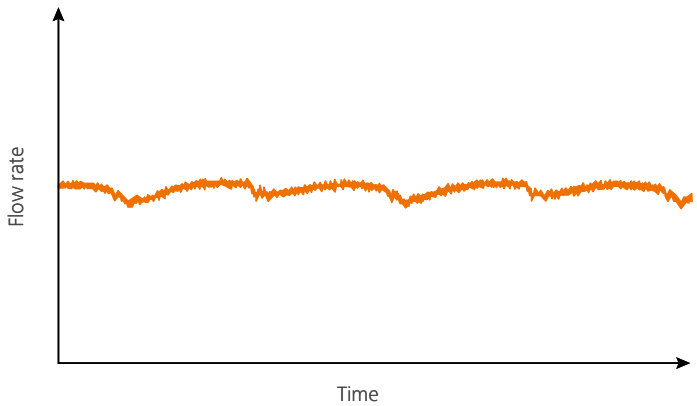

Figure 4.32: Residual ripple of an optimized flow rate curve with trapezoidal linearization

Triple pump arrangement

It may be reasonable to use three individual pumps in a synchronized triple pump arrangement to increase the flow rate. This principle corresponds to the double-pump arrangement described above. The difference is that here, an additional pump carries out a discharge stroke within the same time frame. The result is a 50% increase in the flow rate.

One advantageous feature of this type of arrangement lies in the length adjustment of the suction phase, which can now be carried out at a significantly reduced speed, thus reducing plunger acceleration on the suction side.

This allows high-viscosity fluids to be pumped more effectively and even allows unfavorable piping installations to be overcome on the suction side.

A comparison of the double and triple pump arrangements is provided in figures 4.33 and 4.34.

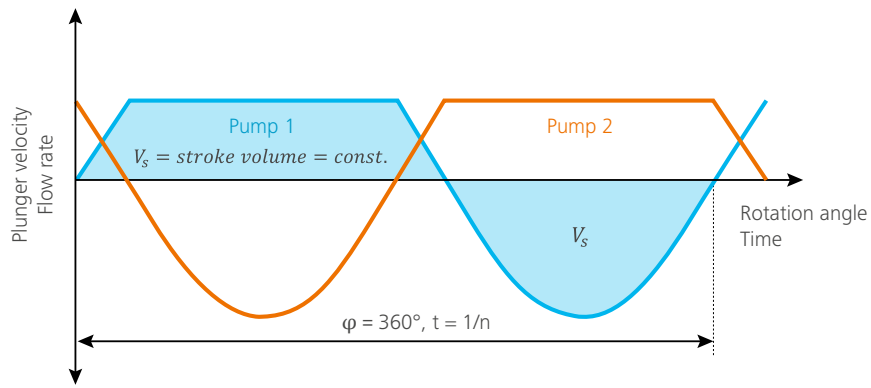

Figure 4.33: Plunger velocity and flow rate, double pump arrangement

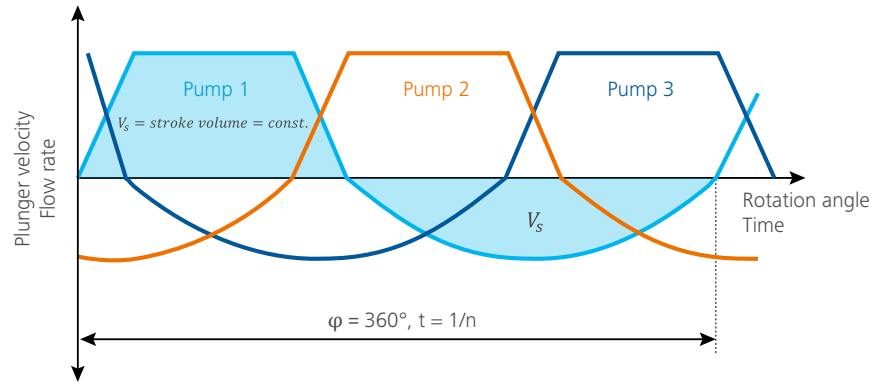

Figure 4.34: Plunger velocity and flow rate, triple pump arrangement

Summary

The ability to control plunger movement in wide areas provides a series of new approaches to fluid kinematics design. However, there are certain boundary conditions that must be observed, such as the maximum possible dynamics based on the inertia of the power train. These conditions must be taken into account from the beginning of system planning.

In addition to the example outlined for low-pulsation pumping characteristics, it is also possible to use fluid kinematics control to implement filling processes and micro flow metering. The applications named here are only a few select possibilities. Other applications are conceivable as well.

Using a defined synchronization of plunger movements for multiple pumps, also in interaction with additional system components in mixing, metering or filling processes, opens up new possibilities in metering technology and system engineering.

5 Economic efficiency

In this chapter you will learn about the aspects that have to be taken into account in the design and operation of pumps to ensure that they are profitable. You will find information about evaluating the energy efficiency of reciprocating positive displacement pumps and a comparison of the efficiency of these pumps to that of centrifugal pumps. Finally, a more detailed explanation of the life cycle costs is provided.

The amount of power consumed by pumps worldwide is enormous. Various estimations assume that about 10% to 25% of the power generated worldwide is needed to operate pumps. For Germany, the Fraunhofer Institute for Systems and Innovation Research calculated that 12% of the total power consumption comes from pumps. When pumps are used as part of large-scale industrial plants, their power consumption percentage is also considerable. The Hydraulic Institute in New Jersey calculated that about 27% of the power consumption from large-scale plants is caused by pumps. Despite the high energy consumption of these pumps, there still have not been any specifications, guidelines or standards adopted for increasing the energy efficiency of industrial pumps – unlike, for example, heating water circulation pumps, which fall under the Ecodesign directive 2009/125/EC of the European Union. However, preparations for regulating industrial pumps have been initiated.

Nevertheless, governments and society are endeavored to reduce the consumption of primary energy. To realize these ambitious goals, a resolution made by the German federal government in 2010 calls for the energy productivity in industrial manufacturing to be increased by 2.1% annually. Turbomachinery such as pumps, ventilators and compressors rank among the especially energy-hungry components of any plant. In view of this development, factors such as energy efficiency and the efficiency of a pump are becoming more important.

Energy efficiency of metering pumps

Energy efficiency η_P describes the relation between hydraulic output P_{hyd} and required drive power P_d:

$$\eta_P = \frac{P_{hyd}}{P_d} \quad (5\text{-}1)$$

In the case of reciprocating positive displacement pumps, a clear distinction must be made between the volumetric efficiency η_v and the energy efficiency η_P according to the following equation:

$$\eta_v = \eta_e * \eta_g \quad (5\text{-}2)$$

The quality grade η_g primarily represents the gap losses, in the case of displacement pumps, for example, at the fluid check valves and hydraulic valves as well as at the plunger. This is fully included in the calculation of the volumetric efficiency and energy efficiency η_P. The degree of elasticity η_e indicates the energy losses through purely elastic processes in the pump head. Due to the reversibility of these processes in the pump, the forces balance out as much as possible in terms of energy. Thus η_e is not included in the calculation of the energy efficiency of the metering pump.

The energy efficiency of a metering pump can be derived as follows:

$$\eta_P = \eta_g * \eta_f * \eta_{gear} \quad (5\text{-}3)$$

Factors affecting the energy balance are the quality grade η_g, the efficiency factor η_f used to describe friction losses as well as the gear efficiency η_{gear}.

Comparison of the efficiency of displacement and centrifugal pumps

For reciprocating positive displacement pumps (and especially diaphragm pumps), the high efficiency can be traced back directly to the underlying working principle. The movement of the plunger, which acts hydraulically on the diaphragm, creates an alternating positive and negative pressure in the pump head. In the suction phase, the inlet check valve opens and the liquid is drawn in. In the discharge phase, the outlet check valve opens and the liquid is pumped into the discharge line. This causes the energy that is needed for the plunger movement to flow almost entirely into the fluid transport. The resulting leakage and friction losses are very small in comparison. Reciprocating positive displacement pumps work similarly in principle to a human heart. This organ also works with suction and pressure phases, inlet and outlet valves as well as positive and negative pressure.

Diaphragm pumps achieve a quality grade η_g between 0.98 and 0.99. The efficiency factor η_f is usually even above 0.99. Thus, the overall efficiency primarily depends on the gear efficiency. For proper designs, values between 0.91 and 0.95 are entirely possible. After multiplication, the overall efficiencies η_P for high-performance process diaphragm pumps can be around 90%.

The operating principle of the displacement pump differs fundamentally from that of the centrifugal pump. The centrifugal pump uses a redirection of the flow and the centrifugal force resulting from the radial velocity. The fluid enters the centrifugal pump through the suction pipe. It is caught by the rotating impeller and forced outward in a spiral path.

The increase of the fluid velocity in the impeller causes the pressure in the pump to increase. As a result, the fluid is conveyed into the discharge line. Centrifugal pumps have a high internal backflow in comparison to displacement pumps, due to their internal gaps.

In practice, actual operating points frequently deviate from those previously calculated. This is partially due to the fact that safety margins are incorporated into the design. The design is not created for the sake of the operating point itself. Substantial efficiency losses can be the result here. These losses are typical for centrifugal pumps when operating outside of the optimal operating range.

While single-stage centrifugal pumps often run at efficiency levels of 50% or lower, diaphragm and plunger pumps are typically operated at efficiency levels above 90% for a large operating area. Under optimum conditions, centrifugal pumps can also achieve an efficiency as high as 90%. This is, however, limited to a few pump types, special setups and applications as well as to one optimal operating point. Figure 5.1 shows exemplary energy efficiencies of some high-speed and multistage centrifugal pumps and process diaphragm pumps.

The conversion of operating energy into hydraulic energy can be carried out at a much higher efficiency level for "hydrostatic" diaphragm pumps than for "hydrodynamic" centrifugal pumps, due to the hydromechanical laws. The advantage of reciprocating positive displacement pumps in comparison to rotating pumps matters most in partial load operation, at high pressures and at small flow rates.

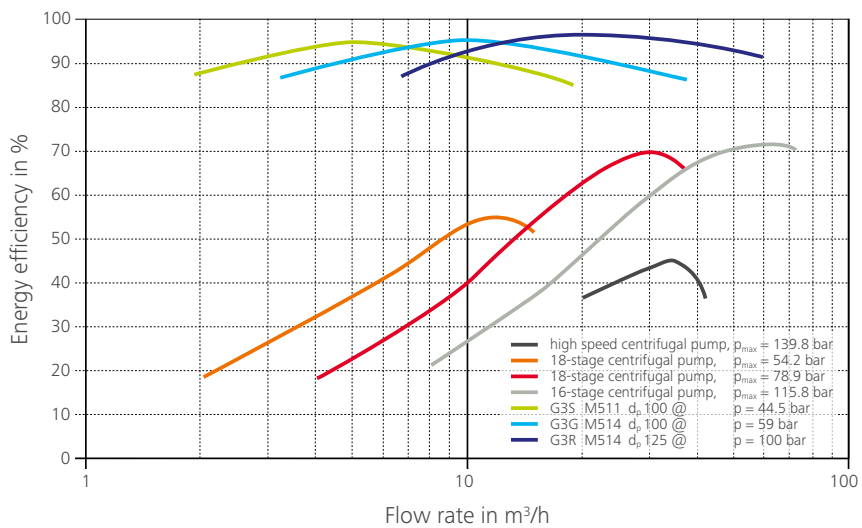

Figure 5.1: Energy efficiencies of pumps

Process diaphragm pumps vs. centrifugal pumps in operation

In practice, multi-stage centrifugal pumps, high-speed centrifugal pumps and process diaphragm pumps are used for pumping applications in ranges from 2 to 200 m³/h and pressures between 40 and 1,000 bar. Multistage centrifugal pumps are used in cases where one impeller cannot build up enough pressure on its own. Series connection of multiple impellers makes pumps more complex and expensive.

High-speed centrifugal pumps provide large pressure increases through the high circumferential speeds of the extremely fast-moving pump wheel. To ensure safe operation of these pumps, however, various parameters such as pressure ratios, temperatures and pump wiring must be strictly observed. Failure to observe results in a risk of substantial damage to the machine. The relatively high noise level must also be considered, which results from the high speeds of up to 20,000 rpm.

For pumping applications with the described requirements, the use of process diaphragm pumps instead of multistage centrifugal pumps or high-speed centrifugal pumps is normally the more energy-efficient and cheaper solution in the long term.

Irrespective of higher investment costs, diaphragm pumps often require less maintenance and, thanks to their much higher efficiency, lead to considerably lower operating costs.

Design of the pump system

The efficiency of reciprocating positive displacement pumps does not decrease as significantly in the partial load range in comparison to centrifugal pumps. Nevertheless, proper design of the system in which the respective pump is operating is a central factor. Before installation into the system, the reciprocal effects of the individual system components, the kinematics and the number of cylinders of the respective pump, as well as the stroke frequency and the properties of the fluid being pumped must be evaluated precisely. The system must be viewed as a whole, as doing so is the only way to achieve optimal efficiency. A negligent system design or ill-considered subsequent changes to individual components will result in faults for the reciprocal effects in the system and thus to avoidable efficiency losses.

A so-called pulsation study provides information about the proper design of a system with respect to the pressure losses in the piping and fittings and pressure pulsations. If systems are not designed properly, they must be retrofitted or modified in the worst-case scenario. This may be the case due to cavitation, overload operation, excessively high pressure pulsations or vibrations or because operating points cannot be reached with the respective configuration. Using pulsation studies during the design phase helps to prevent downtime and production losses resulting from these subsequent improvements. In addition, the operating life of wear parts can be improved.

Life cycle costs

To date, many system operators have been letting their decisions to purchase a new pump depend on the initial investment cost only. However, the majority of the costs are not incurred until the pump is in operation. Aside from the initial investment costs, operators should therefore particularly take energy consumption, operating expenses as well as maintenance, downtimes and resulting production losses into consideration when determining the overall life cycle costs of a metering pump. When it comes to small and medium-sized metering pumps, energy costs and differences between different models or manufacturers are negligible. This is why the primary focus for purchasing should be maintenance costs and possible production losses.

For this reason, operating safety is also a crucial factor. Diaphragm pumps work without dynamic sealing due to their engineering design. Thanks to the hermetically tight working chamber inside the pump head, there are no emissions into the atmosphere – critical substances cannot escape and contamination of the fluid is impossible. In addition, mechanical seals and pressurized barrier fluid systems are obsolete. Diaphragm pumps by many manufacturers have a technical tightness that fulfills, for example, the Directive 2010/75/EU of the European Union on industrial emissions or the "Technical Instructions on Air Quality Control" (TA Luft) of the German Federal Ministry of the Environment.

Diaphragm pumps are extremely long-lasting and designed for long periods of operation and service life. If the quality of the pump is high enough, a machine service life of multiple decades is entirely possible. Even wear parts such as PTFE diaphragms or pump valves can, depending on the design and application, be used for up to 20,000 hours or longer. The same applies to downtimes. Depending on the manufacturer and application, diaphragm pumps can have an availability of up to 99%.

Applications

6

In this chapter, a selection of industry applications is presented. Special attention has been paid to ensure that the depicted applications differ in terms of system design and engineering.

6.1 Oil & Gas – Methanol injection

Methanol is highly flammable and burns with a bright flame. The flame is barely visible in daylight, making it extremely dangerous. Flammable gas/air mixtures can form, and ignition, due to electrostatic charges, is possible even at concentrations as low as 25%. The decomposition products are carbon dioxide, carbon monoxide and formaldehyde.

Methanol itself is not toxic, but the enzymes in the human body metabolize it into formaldehyde and formic acid. Formaldehyde is highly reactive and formic acid extremely acidic. The reaction time in the body is 15 hours or more, so the actual cause of the poisoning can often no longer be determined. Methanol must therefore be handled with extreme caution and processed in as leak-tight and leak-free a manner as possible.

In the oil and gas industry, methanol is mainly used for dehydration and de-icing. It is injected into the pumped fluids both continuously and intermittently. It prevents the formation of hydrates, mainly in offshore wells, and lowers the freezing point of water percentages during gas transport.

The microbes that are used for the final removal of oil residues in the last water preparation step of a refining process would be killed by methanol. Since LDHIs (Low Dosage Hydrate Inhibitors) are more expensive than methanol, they are used only if actually specified.

It must be taken into account that LDHI injection quantities are significantly lower, normally only 1/10 or 1/20 the quantity of the methanol. In addition, at high pressures (> 350 bar) they can crystallize and become very abrasive and, for example, require the use of special valve materials.

LEWA offers special pump packages for specialized oil and gas transport requirements. These packages enable high pressures up to 1,200 bar and require low maintenance.

Figure 6.1: Methanol injection package with liquid-type dampers

6.2 Odorization – Gas odorization in the natural gas distribution grid

At junctions in the gas distribution network of major energy suppliers, large amounts of natural gas are redirected from the high-pressure network into different subnetworks. Gas pressure regulation and measurement systems are necessary to ensure the corresponding safety conditions. Depending on the application, the gas is odorized centrally in the high-pressure network or locally at various local networks. In other words, an odor-intensive substance is injected into the natural gas, which is odorless itself. Tetrahydrothiophene (THT), an organic sulfur compound with an intense odor, is used as the odorant. This is implemented in odorizing systems, which have to process a throughput of up to 1,000,000 scm/h (standard cubic meter/hour) in three control lines (standard rails). Each line (rail) has to process a maximum of 330,000 scm/h at a gas pressure of 70 bar.

The largest odorizing system in Germany, type OD 4200, was built by LEWA in 2015. The OD 4200 system has 3 pressure-shock-resistant supply containers with a capacity of 4,200 L of odorant (3 x 1,400 L). As needed, the system can use three pumps plus one spare pump to handle the total volume of 4,200 L, or it can act as three individual systems operating at 1,400 L each. If a fault arises in one of the three metering units, a switch over to the spare metering unit takes place automatically. It consists of a pump, volume measurement and a control device in order to guarantee redundancy with all three control lines (standard rails). Simultaneously, a message is sent to the control center on the customer's side.

Figure 6.2: Odorizing system with pumps, tank and measuring unit

6.3 Refineries – Production of biofuels

Biofuels made from biomass are considered energy sources with future potential. Over the course of the energy revolution, increasingly more focus has been placed on biofuels such as biodiesel, bioethanol and various synthetic fuels. In the manufacturing process for BtL fuels (Biomass to Liquid), the first important step is the pyrolysis of the biomass. The chemical structure of the biomass is changed through a complete or incomplete thermal dissociation at various temperatures ranging from approx. 200 °C to over 900 °C. Long molecule chains break down due to the influence of heat. This process creates what is called a synthetic gas, which contains various hydrocarbons with shorter chain lengths as well as carbon monoxide, carbon dioxide, carbon and water. During the next step, synthesis, the dissociation products of the synthetic gas are processed. The Fischer-Tropsch process is also applied here. Various gaseous and liquid hydrocarbons remain as a result of the synthesis. These are used as low-sulfur synthetic fuels in industry.

When producing BtL fuels, fluids are thus pumped under critical process conditions. Depending on the property of the biomass, plunger pumps or process diaphragm pumps in a remote head design are used. For this type of pump design, safe operation is achieved through the spatial separation of the pump head from the pump drive. Diaphragm pumps in the remote head design are used up to a temperature of 400 °C, which may result from the biomass processing in the high-pressure reactor.

Figure 6.3: Remote head pump with separation of the remote valve head and pump drive unit

6.4 Petrochemicals – Silane metering

Silanes are a group of chemical compounds used for a range of purposes including adhesion promoters and grafting additives for manufacturing cable insulation or for the production of chemical intermediates.

In order to achieve optimal compliance with a wide range of important requirements, such as reproducibility, consistency and product purity for plastics used in producing cable and wire insulation, as well as plastic pipes, metering must be precise, easily adjustable, and unaffected by external influences.

Extremely precise metering into the extruder is carried out using a feed hopper or an injection nozzle, which places silane in the polymer melt in the process zone of the extruder. The choice of silane type depends on the polymers. Special types of organofunctional silanes open up new application possibilities because they are important components in paints and coatings, and their adhesion to various surfaces is guaranteed for years.

The speed of the silane crosslinking of polyethylene in cables can be influenced by various parameters, including but not limited to the silane type, the size of the components being crosslinked, the temperature, the pressure, the number of water molecules present and not least by the amount of catalyst.

LEWA creates systems that can meter any silane type reliably and precisely, as well as in constant consistency and purity, regardless of chemical or physical attributes or process requirements. Through adaptive control, the "LEWA smart control" unit enables quick adjustment of the actual value for highly precise metering without a significant settling process.

Figure 6.4: Metering system with diaphragm pump technology

6.5 Chemicals – Caustic soda production

Caustic soda is the designation for alkaline solutions of sodium hydroxide (NaOH) in water. Due to its very high solubility in water, caustic soda as a cleaning solution is one of the most frequently used laboratory and industrial chemicals. Caustic solutions such as caustic soda are normally commercially available in concentrations of 50% and higher. During dilution into commercially available concentrations, heat is released. Thus, dilution must be carried out in a controlled process in which precipitation and excessive exothermic reaction are prevented. There are two typical methods used for caustic soda production, namely with or without inline dilution systems. Both methods involve adding a defined amount of water to the concentrated caustic solution. This process makes use of metering pumps.

LEWA has developed special systems for such chemical processes that are suitable for all standard concentrations on the market. With these systems, the dilution process for caustic soda solutions can run either in manual operation or in automatic operation. For the latter, flow meters are used which make it possible to measure concentrations and record the process.

Examples of applications for which the LEWA systems can be used to produce diluted caustic solutions include water treatment, rinsing and cleaning of bottles in beverage filling plants, cleaning agent production, vegetable oil processing, and the neutralization of acids.

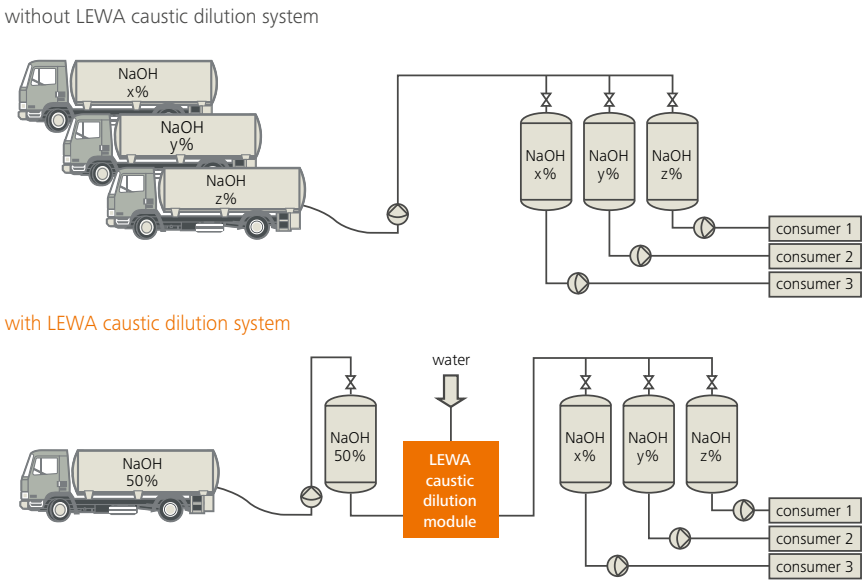

Figure 6.5: Schematic of caustic production with and without inline caustic dilution system

6.6 Plastics – Precise metering of blowing agents in extruders

During the production of extruded foams, continuous and precise metering of the blowing agent in the extruder is essential for the quality of the end product.

When producing PPE foam, a blowing agent is injected into the plastic melt in the extruder under pressures of up to 350 bar. The plastic expands 20 to 50 times in volume when extruded through a hole-type nozzle.

In the production of foamed films or foamed sheets, the continuous extrusion process is carried out using what are called "cascade extruders". While the plastic granules are melted in the first extruder, the blowing agent is added steadily in the second extruder. The important factors in the process are the continuous measurement of flow rates, the precise control of the blowing agent being metered as well as integration into the overall process. This requires self-monitoring metering systems such as LEWA ecofoam that are specially designed to meter blowing agents. The ecofoam unit from LEWA is a compact, tested unit that is ready for use with any standard extruder. The system can be used for any conventional blowing agent such as butane, CO_2, halogenated hydrocarbons, pentane and propane.

Figure 6.6: LEWA ecofoam to meter different blowing agents

6.7 Personal care – Supercritical fluids in the cosmetics, food and pharmaceutical sectors

Supercritical fluids are increasingly used in the cosmetics, food and pharmaceutical industries. Most frequent applications are supercritical fluid extractions (SFE) where CO_2 is used as solvent. Compared to conventional solvents, CO_2 has not only financial but also environmental benefits. For instance, SFE is a very selective but gentle technique that allows aseptic purification of valuable natural products without the need for any stabilizers.

The region of supercritical fluids begins beyond their critical point of the vapor pressure curve. In this region, there no longer exists a phase transition between gas and liquid, which results in excellent mass transfer properties. They are comparable to those within the gas phase coupled with a liquid-like density, ideal for extraction processes. During a cyclic process, liquefied CO_2 is compressed by a diaphragm pump above its critical pressure and then heated above its critical temperature by heat exchange. In the extractor, the desired product, the extract, is extracted from the feed mixture. Due to pressure release and temperature reduction, CO_2 returns to the vapor phase, and the purified extract is removed in a separator. To close the cycle, CO_2 is re-liquefied and fed back into the process.

Using CO_2 provides additional advantages, such as the fact that CO_2 is cheap, inert and non-flammable. Unlike conventional extraction processes, the extract is free of residual solvents. Due to the low critical temperature of CO_2 at 31 °C and the low critical pressure at 73.8 bar (abs), sensitive natural products can be gently extracted. However, if needed pressures up to 1000 bar can be used during high-pressure extractions.

Specifications for LEWA metering and process diaphragm pumps used in extractions depend on their versatile applications. Examples of SFE in the cosmetic industry are the extraction of natural products, such as chamomile, rosemary, and lavender, which are added into lotions, shampoos and tooth paste but are also used as natural remedies. SFE is applied in the food industry for the decaffeination of coffee and tea, the extraction of oil seeds, aromas and spices as well as the removal of harmful substances such as pesticides from classical food production.

LEWA metering pumps and process diaphragm pumps are also successfully applied in a series of other supercritical fluid processes such as supercritical fluid chromatography (SFC). These processes are applied in the pharmaceutical industry for purifying, for instance, Omega-3 fatty acids from fish oil extract or for chiral separations. Furthermore, hermetically tight diaphragm pumps meet the requirements for supercritical formulation, cleaning and drying processes.

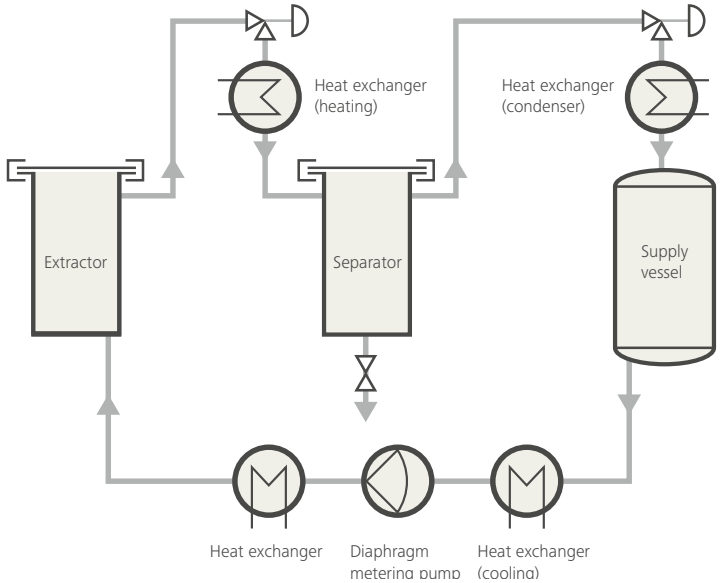

Figure 6.7: Principle of a supercritical fluid extraction plant

6.8 Food – Production of spreadable butter

When manufacturing different types of butter, it is very important to reproduce the respective flavor characteristics of each kind precisely. In order to maintain consistent spreadable butter quality, ingredients such as rapeseed oil, water, and brine are metered flexibly and fully automatically using pumps.

Here, special requirements relating specifically to the hygienic standards and the metering accuracy of ±1 percent are placed on the pumps. The goal is to guarantee exact reproduction of characteristics such as a defined salty taste, even after the system has been in use for years.

For ingredient metering in butter production, LEWA offers a tried-and-tested solution: the LEWA ecoflow. The food-grade design of this pump guarantees consistent quality for the production of various types of butter. All materials have been selected and adapted to ensure that they are suitable for handling foods, e.g. in order to avoid corrosive effects of brine on valve seals. Materials such as Gylon® are used for this purpose. The pump diaphragm consists of special PTFE that LEWA obtains directly from a trusted supplier, monitors continuously and processes further. The PTFE diaphragm is also FDA-compliant. Alternatively, LEWA ecoflow is available in a sanitary design. The minimal dead space and smooth 316/316L (1.4401/1.4404) stainless steel surfaces of this design enable high-quality and straightforward CIP cleaning on the inside of the pump.

The patented M9 technology of LEWA pumps makes them highly robust and reliable when used in a wide variety of operating states, as well as virtually maintenance-free. This means that, even if the diaphragm does need to be changed, doing so requires hardly any interruptions to the process chain. Even for long operation times, the pumps achieve a metering accuracy of ±1 percent. The combination of frequency control and electric stroke adjustment allows the pumps to be automated across a very broad adjustment range and operated with a high degree of flexibility. Thanks to the availability of multiplex pumps, various metering tasks can be combined efficiently.

Figure 6.8: Pump heads in sanitary/hygienic design

6.9 Energy – Flue gas cleaning by sulfur metering

Flue gas is created during a wide range of combustion processes and may, in addition to various dust particles, contain oil, acid fumes, carbon monoxide and other toxic substances. In order to minimize the environmental impact, the resulting flue gas must be purified.

One option for flue gas cleaning is electrofiltration. In this process, ash and dust particles are ionized in an electric field. The charged particles migrate to a collecting electrode, where they are discharged. Adhesive forces keep them bonded to the electrode in the form of a dust layer. The electrode must be cleaned regularly.

In order to improve the efficiency of the electrofilter, sulfur trioxide (SO_3) can be metered into the flue gas. To this end, sulfur is melted and then fed into a sulfur burner, where a mixture of sulfur trioxide and air is generated. This mixture is then metered into the flue gas. The SO_3 reacts with the fly ash, thereby changing the electric resistance of the flue gas.

This conditioning of the flue gas increases the filtration efficiency of the electrofilter significantly and has more or less the same effect as doubling the filter area.

For flue gas cleaning by sulfur metering, LEWA ecoflow provides a suitable solution. It is available in either a plunger or diaphragm design. The fully heated design of the LEWA ecoflow prevents solidification of the liquid sulfur (the melting point of sulfur is 115 °C). The built-in valves and plunger seals are also heatable with vapor, ensuring that the correct temperature is maintained reliably in each part of the pump head.

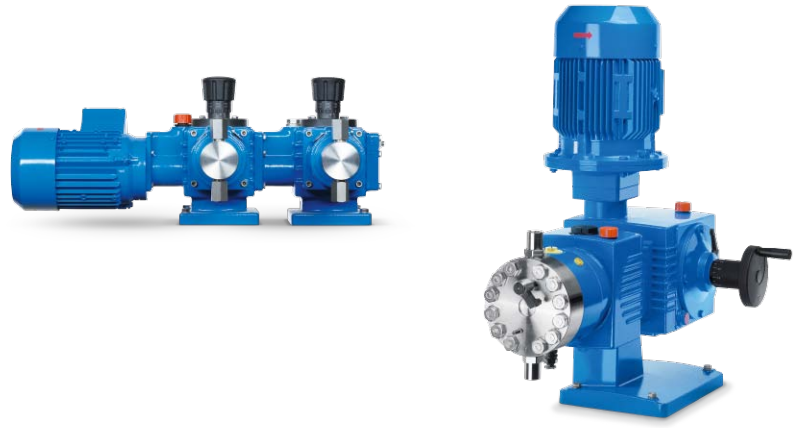

Figure 6.9: LEWA ecoflow in plunger design or diaphragm design

6.10 Pharmaceuticals – Chromatography

Chromatography is a chemical process that allows fractionation of a mixture of substances into its individual components. Here, the mixture or sample, respectively, is dissolved in a fluid called the mobile phase. The mobile phase is moved through a stationary phase containing another material. Due to different manners of interaction of the individual components with the mobile and the stationary phase, the individual components of the sample are transported onward at different speeds, thus being separated from each other.

For the process, the flow of the mobile phase and the injection of the product must take place uniformly. This can be ideally implemented with suitable metering pumps.

When this process is used in research, a large number of samples are injected fully automatically by what are called autosamplers This process is called the batch process. Then the actual fractionation of the substance mixture takes place on the separation section in a fraction collector. The separation section is the area in the process where the individual

components of the sample are detected. In order to achieve better separation of the components, physical and chemical properties of the sample can be used such as light absorption and fluorescence or dyeing with ninhydrin.

For the production of active ingredients produced primarily with biotechnological methods, the EcoPrime series from LEWA has laid the foundation for one of the most advanced and precise chromatography systems in the world. Here, the compact system can be operated both as a buffer in-line dilution system and an independent chromatography system. The systems stand out thanks to a very low hold-up volume for the system piping, EHEDG-compliant pump heads with multi-layer PTFE diaphragms and a diaphragm monitoring system. The pump heads are separated from the mechanical drive itself, preventing any potential contact with the process fluid.

The systems stand out for their flow tolerance accuracy of 0.5% or better. This results in both rapid flow stabilization and rapid column equilibration and thus a significant increase in product yield. Thanks to the low tolerance, production processes can be run with a higher repeat accuracy.

One advantage of the LEWA EcoPrime systems is the fact that the differences in inlet pressure between the tank and the pressure pipe have no effect on the system flow, and thus have no effect on the flow rate in the chromatography column. This results in a nearly pulsation-free flow rate, which has a positive effect on the service life of the column medium. The system's fraction collection is freely configurable in terms of software and hardware. Customer-specific adaptation is also possible. For example, the gradient for the elution of the active ingredient can be adjusted between 1% and 99%. Thanks to the component selection and the design of the hygienic system, such as the optional CIP and SIP functions, it is quick and easy to clean with cleaning chemicals or steam. The systems meet the GMP requirement for DQ, IQ/OQ up to the FAT and the final acceptance. Meeting the specifications in accordance with CFR 21, part 11 for traceability of operational use and operating personnel interference is ensured through an audit trail. Thanks to the open software architecture, the control system can be combined freely with all SCADA systems.

Based on the batch system concept, LEWA has designed the continuously working "EcoPrime Twin" systems, which process products continuously using a 2-column method. This technology is currently being introduced to the pharmaceutical market and is significantly reducing production costs while increasing productivity.

Figure 6.10: LEWA EcoPrime Chromatography System from a single source

6.11 Research and science – CO_2 cooling

The European Organization for Nuclear Research (CERN) operates the Large Hadron Collider (LHC), the world's largest particle collider. The Large Hadron Collider beauty (LHCb) experiment, the A Toroidal LHC ApparatuS (ATLAS) experiment and the Compact Muon Solenoid (CMS) experiment are three experiments that are carried out using the LHC.

In order to achieve precise measurements, silicon detectors are mounted in the immediate vicinity of the interaction point of all experiments. Carbon dioxide cooling systems cool the inner layers of the detectors to temperatures as low as -40 °C. The LHCb experiment has been using metering pumps for this purpose since 2007. Two additional systems have been controlling the temperature management of the IBL (Insertable B-Layer) subdetector of the ATLAS experiment since the beginning of 2015. One reason why the CERN research institute opted for LEWA metering pumps is because no oil is permitted in the detector cooling circuit. This is due to the fact that the influence of radiation on oil may cause the oil to harden, resulting in the risk of blockage in the thin cooling lines. Since there is no oil-free compressor for CO_2 available on the market, the only possibility is to use a circuit operated by an oil-free pump. Oil-free rotary lobe pumps must be lubricated by the circulating coolant. Due to the very poor lubrication properties of CO_2, metering pumps are used that, unlike other pump types, do not require any lubrication through the conveyed fluid.

The CO_2 cooling system for the CMS pixel detector features an overall power dissipation of 15 kW, which is much higher than that of the LHCb and ATLAS systems. The dissipation levels of these systems are of the order of 2 kW. For this reason, LEWA remote head metering pumps with cooling jacket are used in this application. Unlike standard pumps, remote-head pumps can convey the highly compressed CO_2 without heat input from the drive unit. The transfer of the displacer movement is carried about by the liquid column contained in the connection line. Firstly, this means that the remote head design keeps critical conditions away from the displacement system. Secondly, CO_2 heating is prevented, which would result in the formation of gas bubbles and thus a drop in the flow rate.

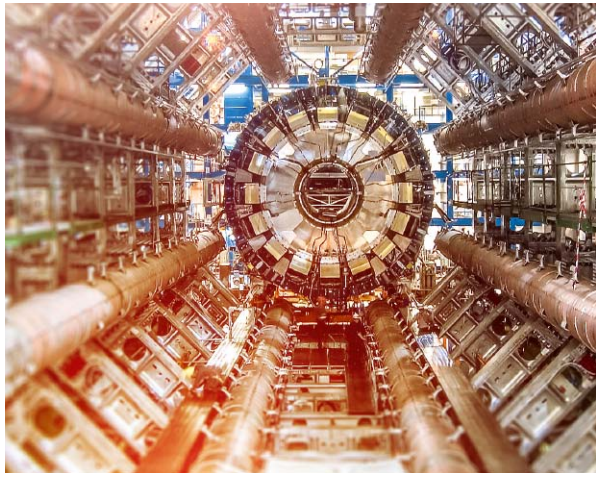

Figure 6.11: Large Hadron Collider by CERN

6.12 Drive technology – Continuous metering of micro flows

To test whether oil components in liquefied petroleum gas have harmful effects on gas combustion engines, very small volumes of oil should be injected into a corresponding test stand.

The metering system developed for this purpose works according to the principle of adaptive volume flow control. What is called an s_0 measurement is carried out in the compression phase during continuous operation, i.e. after the suction phase, the plunger starts at the rear dead center and moves to the point where the inner pressure inside the pump head is the same as the outer system pressure. Based on this detected point of balance of pressure, which is referred to as s_0, the calculation of the necessary stroke frequency needed to achieve the specified target volume flow is carried out.

The change to the s_0 value, i.e. the change in pump efficiency that occurs due to small air bubbles, for example, is recorded for each individual pump stroke and corrected by recalculating the stroke frequency (adaptive volume flow control). No flow meter is used. For the application, a LEWA metering system was developed featuring intellidrive technology combined with a LEWA metering pump. This micro flow metering pump makes it possible to meter non-critical fluids efficiently, which in this case enables virtually continuous and steady oil metering at extremely low volumes (down to 1 ml/h). The combination of the LEWA ecoflow and the LEWA intellidrive systems makes it possible to implement the necessary motion control for micro flow metering.

In practical application, the customer can use the operating panel to configure settings such as metering flow target values, timers, speed settings, etc., as well as switch between various modes.

The low metering volume is implemented using a pressure measurement taken inside the pump and the detected movement data for the plunger. In doing so, the flow rate is kept constant even if the operating conditions change. Thanks to this adaptive volume flow control feature, it is not necessary to use an expensive flow meter.

Unlike many other metering pumps, particularly in the area of plunger pumps, this solution also makes use of hermetically tight metal diaphragm pumps for process pressures up to 500 bar.

Figure 6.12: Solutions for microflow metering applications

Glossary & Abbreviations

American Petroleum Institute API
The American Petroleum Institute is a national trade association representing all aspects of America's oil and natural gas industry.

Biomass to Liquid BtL
Biomass liquefaction. Process for manufacturing synthetic fuels from biomass.

Bubble point pressure
Comparable to the vapor pressure. Temperature, at a given pressure, where the first bubble of gas is formed when heating a liquid mixture. Also used when dissolved gas starts to outgas from the liquid.

Canadian Electrical Code CEC
Standard of the Canadian Standards Association defining the installation and maintenance of electric equipment.

Cavitation
Vaporization of a fluid if the pressure in the system at a single point is less than the vapor pressure of the fluid. Conversely, after the vaporization process, the tiny gas bubbles implode when the pressure rises again. Upon implosion, micro-jets are formed. Their peak momentums are high enough to render surfaces in the affected area, and thus materials, porous and permanently damaged.

Chromatography
In chemistry, chromatography refers to a process that allows a mixture of substances to be separated through differential partitioning of its individual components in a mobile phase traveling through a stationary phase. Chromatography is used in organic chemistry, inorganic chemistry, and the pharmaceutical, biochemistry, biotechnology, microbiology, food chemistry and environmental chemistry industries.

Cleaning in Place CIP
Refers to a process for cleaning a system or complete production unit (e.g. process-engineering systems, pharmaceutical or biological production systems) without disassembly, being "in place for production". An approved CIP procedure is used for the cleaning of the equipment, referring to a specific contact time, pressure, flowrate, cleaning reagent or other process-relevant parameters.

Closing delay
The closing delay of a fluid valve is the gap between the points of time when the plunger reaches the dead center and the closing body shuts the valve. In case of highly viscous fluids, the closing body may reach the valve seat later than it should, which results in a loss of flow rate due to backflow.

Closing energy
The closing energy of the fluid valves is mainly the kinetic energy of the closing body when hitting the valve seat. So, it is defined by the mass, speed and differential pressure when the valve is closing. Depending on the specific amount of energy, this can lead to wear or deformation of closing body and valve seat.

Code of Federal Regulations CFR
In addition to the United States Code, the Code of Federal Regulations represents an important source of federal laws of the United States. While the United States Code usually contains only laws, the Code of Federal Regulations includes the administrative regulations enacted by federal agencies. For example, CFR 21 and the following parts deal with pharmaceutical production and their legal aspects.

Compressed Natural Gas CNG
Natural gas (methane) stored at high pressure.

Condition Monitoring System CMS
Condition monitoring systems identifying changes in monitored parameters in machinery in order to indicate upcoming faults and to predict when maintenance should be performed. The use is the possibility to schedule service intervals as and when required and therefore to prevent damages and breakdowns.

Conseil Européen pour la Recherche Nucléaire CERN
European Organization for Nuclear Research.

Control push rod
Spring-loaded valve spool that is used for diaphragm positioning by controlling the point of time for replenishing oil. It replaces the rear perforated disk in the diaphragm pump, as well.

Current Good Manufacturing Practice CGMP
Inspection methods and guidelines to ensure a controlled production under good and consistent, approved quality aspects used in the pharmaceutical industry. In an audit, authorities will check the current quality standard in the manufacturing area or site.

Dead center
At plunger pumps, the dead centers are the front and the rear end points where the plunger's movement reverses.

Dead space
The dead space is the volume that remains in the pressurized hydraulic and working chambers when the plunger and diaphragm reach the front dead center. The size of the dead space has a reciprocal influence on volumetric efficiency since this fluid volume is compressed and decompressed during each stroke and thus not contributing to the conveying function.

Degassing valve
See vent valve

Design Qualification DQ
The equipment user certifies that the equipment has been designed correctly and built to meet the specifications to follow GMP aspects and fulfills requirements. DQ starts during the planning phase for the equipment and includes documentation from the beginning to finalization of the unit.

Diaphragm
The diaphragm has various functions. It separates the working space and the hydraulic space and transfers the movement of the plunger to the conveyed fluid. Diaphragms are usually made from either plastic or metal.

Diaphragm positioning system
The diaphragm positioning system brings the diaphragm into correct position before start up when the pump is still standing still. This is necessary if there is negative pressure on the suction side during standstill. Then the diaphragm could move forward into an incorrect position due to leakage at the plunger seal.

Diaphragm support plate
Diaphragm support plates are perforated disks installed in the hydraulic chamber and in the working chamber. They are used to support the flexible diaphragm at the front dead center and at the rear dead center, preventing overstretching of the diaphragm.

Discharge side
Output side of a pump.

Displacer
In case of displacement pumps, this is the component which directly or indirectly sets the fluid in motion, and basically pushes and drags it to be pumped. Displacers can be spindles, eccentric screws, plungers, rotary plungers, gear wheels, rolling plungers, vanes, diaphragms, etc.

Dissipation
Irreversible process in which entropy is produced. Some of the "usable" energy is lost and released as heat.

Drive unit
Unit between drive and pump head. In most cases it transforms the rotary motion of the drive into a reciprocating movement. This is often realized by a crank mechanism and a

reduction gear for reduced speed integrated in a single housing.

Electric stroke adjustment
Device for adjusting the stroke of the plunger based on an electric drive.

Electromagnetic compatibility EMC
Electromagnetic compatibility means that an electronic or electrical product or system shall work as intended in its environment. The product shall not generate electromagnetic emissions which may disturb or influence other products, and it also shall be immune in the presence of electromagnetic environments. EMC is a branch of electrical engineering and deals with problems of conducted interferences as well as radiated emissions.

Elution
An extraction process in which one component is washed out from a material by means of a solvent or a mixture of solvents. In chromatography for example, the desired product is removed from the stationary phase by the eluent and collected further down in the process equipment.

Energy productivity
Energy consumption in proportion to the gross domestic product (GDP)

European Hygienic Engineering and Design Group EHEDG
EHEDG certification: Certification for hygienic machines, devices and components that are designed for cleaning with fluids.

Factory Acceptance Test FAT
The factory acceptance test of a product at the manufacturer's facility to check whether the product complies with the customer's order and specifications.

Fluid mechanics
Study of the mechanics of fluids, consisting of two branches: fluid statics, which is the study of fluids at rest, and fluid dynamics, which is the study of forces acting on fluids in motion.

Fluid valve
See process valve

Fluids
Umbrella term for media being pumped. Fluids may be liquids, gases, solid materials and mixtures of substances.

Foundation Fieldbus
A fieldbus communication system common in the USA in the areas of production technology and automation.

Frequency inverter
See VFD

Front dead center FDC
Front end point where the plunger's movement reverses

Gas removal plunger
The gas removal plunger is a part of a special design of a gas removal valve where the removed volume is controlled by this plunger.

Gas removal valve
See vent valve

Good Manufacturing Practice GMP
See also CGMP: Method used in many countries to ensure that the current quality standards in the manufacturing of pharmaceuticals, medicinal products, and cosmetics, as well as foods and animal feed, are under control.

High- stroke characteristic
The so-called high-stroke characteristic of a pressure relief valve describes the quick drop of pressure in the hydraulic chamber because of its design affecting a high lift of the closing body when opening.

High- stroke characteristic HART
Communication protocol based on standardized analog 4-20 mA signaling.

Hydraulic chamber
Space behind the diaphragm that contains the hydraulic fluid.

Hydrodynamics
Branch of fluid mechanics which studies the movement of liquids. The name is derived from the Greek "hydros", since the most well-known fluid is water (hydros).

Inlet pressure loss
Pressure loss inside the suction valve and the pump head, caused by the inflow of the fluid in the pump head during the suction stroke.

Installation Qualification IQ
The instrument itself or parts of the unit is/are working according to the designed and planned specifications (during Design Qualification) to be suitable for the selected process task, e.g. a thermometer can read the right temperature range with the needed precision. During the IQ process it is verified that a calibrated reference instrument is used.

Instrumentation and control engineering E/I&C
Electrical/Instrumentation and control engineering: Measurement and control of process variables within a production process. Instrumentation and control engineering typically involves collecting, preparing and further processing measured values in order to control devices using the information obtained or to regulate systems and processes.

Large Hadron Collider LHC
CERN's particle accelerator.

Leak replenishing valve
Suction valve in the hydraulic part that opens to allow the leaked volume of oil to be replenished from the reservoir. It is also called "snifting valve".

Liquefied Gas
A gas that has been liquefied by cooling and/or compression.

Liquefied Natural Gas LNG
Natural gas liquefied by cooling to reduce volume for non-pressurized storage and transportation

Liquefied Petroleum Gas LPG
Hydrocarbon gases (variable mixture, primarily consisting of butane and propane) that have been liquefied by compression.

Low Dosage Hydrate Inhibitor LDHI
Substance for preventing the formation of gas hydrates from water and small hydrocarbons at increased pressure and low temperature. Hydrates may cause blockages in gas pipelines, for example. In order to prevent this, inhibitors are admixed to the transported gas. The LDHIs have a hydrate inhibiting effect even when used in low quantities.

Modbus remote terminal unit Modbus RTU
Modbus remote terminal unit. Tried-and-tested communication protocol for transmitting data between devices made by different manufacturers.

National Electrical Code NEC
A legal standard with validity in the USA that defines the safe installation of electrical connections and electrical equipment.

Net Positive Inlet Pressure NPIP
Net pressure above vapor pressure. NPIP is specified in kPa, bar or psi.

Net Positive Inlet Pressure Available NPIPA
Available net pressure (on the system side) at the inlet cross-section of the pump (reciprocating positive displacement pumps).

Net Positive Inlet Pressure Required NPIPR
Net pressure at the inlet cross-section of the pump (reciprocating positive displacement pumps) required by the pump to run without cavitating.

Net Positive Suction Head NPSH
Net positive suction head in accordance with DIN EN ISO 12723 or the minimum suction head above vapor pressure. The NPSH is specified in m or ft.

Net Positive Suction Head Available NPSHA
Net positive suction head at the inlet cross-section of the pump available on the system side.

Net Positive Suction Head Required NPSHR
Net positive suction head required by the pump to run without cavitating.

Newtonian fluid
A Newtonian fluid, named for Isaac Newton, has a linearly-viscous flow behavior, characterized by a viscosity that is load-independent. This means the viscosity is a pure material property and independent of both shear stress and shear rate. Thus, the fluids obey the Navier-Stokes equations. Water and air are examples of Newtonian fluids.

Operational Qualification OQ
Instrument or complete unit functions in accordance with planned operational requirements. For example, a pump delivers the right flow rate and pressure under the process conditions.

Particles from Gas Saturated Solutions PGSS
High pressure process with supercritical CO_2 for the generation of particles

PID controllers PID
The abbreviation PID stands for Proportional-Integral-Differential and denotes a type of controller in instrumentation and control engineering in which the three controller characteristics – proportional controller, integral controller and differential controller – are combined with one another.

Polyphenyl ether PPE
High-temperature resistant class of polymers, containing a phenoxy and/or thiophenoxy group as repeating unit.

Polytetrafluoroethylene PTFE
Semi-crystalline thermoplastic polymer made from fluorine and carbon, also referred to as Teflon. Thanks to its chemical inertness, it is often used for constructing diaphragms.

Positive Temperature Coefficient PTC
PTCs are used to monitor the temperature in windings of electronic devices and can thus be used as overload protection. PTCs are semi-conductors and their function is based on the property of the material that its electrical resistance increases with rising temperature.

Pressure chamber
Working space of a plunger pump. In a diaphragm pump, the diaphragm separates the pressure chamber in a working chamber and a hydraulic chamber.

Pressure relief valve PRV
Pressure actuated valve in the hydraulic part which opens at a defined pressure depending on the maximum allowed pressure of the pump. It protects the pump from overload by releasing hydraulic oil from the hydraulic chamber to the reservoir.

Process Field Bus PROFIBUS
Standard for fieldbus communication

Process pump
Process pumps are used to feed processes in an industrial plant or installation, and are usually pumps of high hydraulic power.

Process valve
The process valves or product valves are the two valves that separate the suction side and the discharge side of the working space of the pump from the fluid lines. Common designs include ball valves, plate valves and cone valves.

Profibus DP
(decentralized peripheral equipment) DP
A fieldbus communication system common throughout Europe in the areas of production technology and automation.

Programmable logic controller PLC
Industrial digital computer for the control of manufacturing processes

Pulsation damper
Either liquid- or gas-filled vessel that dampens volume and pressure fluctuations in the piping system.

Pulsation suppression device
Any installation that dampens volume and pressure fluctuations in the piping system, e.g. pulsation damper or orifice.

Pumping chamber
See working space.

Rear dead center RDC
Rear end point where the plunger's movement reverses

Recipe metering
Mixing process in which various ingredients are mixed in different proportions. This can be conducted by a multi-head pump, with different pump head sizes, stroke lengths and/or stroke frequencies.

Remote valve head
Pump head part of a remote head pump usually containing the fluid valves. In some cases, the diaphragm is also included.

Removal plunger
See gas removal plunger

Safety Integrity Level SIL
In the context of functional safety, the IEC 61508 and IEC 61511 standards, as well as other standards, describe a process for the determination of potential risks to persons, systems, devices and processes in the event of a malfunction. The SI levels 1 to 4 (SIL1 to SIL4) that originated from the standards specify the defined safety function in case of failure. Safety increases as SIL increases.

Site Acceptance Test SAT
Test of the equipment on site to validate the required performance under process conditions. Criteria and scope need to be agreed between supplier and purchaser.

Snifting valve
See leak replenishing valve

Sodium hydroxide NaOH
Caustic soda is the designation for solutions of sodium hydroxide (NaOH) in water.

Standard cubic meter scm
The standard cubic meter is a unit of volume that is used for gases at defined standard conditions for pressure and temperature, usually at 1.013 bar and 15 °C. However, other definitions of standard conditions are also used, e.g. 1.013 bar and 0 °C, 1.0 bar and 20 °C or 1.016 bar and 15.6 °C (60 °F).

Sterilization in Place/Steaming in Place SIP
Denotes a cleaning procedure in process engineering systems, especially in pharmaceutical and biological production systems, in which all product-contacting surfaces of the system are sterilized without any dismantling being necessary. For SIP in the pharmaceutical industry saturated steam with a certain pressure and temperature is most often used to kill living organisms and spores.

Stroke adjustment
Device for adjusting the stroke of the plunger.

Suction side
Inlet side of the pump.

Supercritical fluid chromatography SFC
Supercritical fluid chromatography, such as the separation and purification of compounds using e.g. carbon dioxide as a mobile phase.

Supercritical fluid extraction SFE
Supercritical fluid extraction for e.g. extraction of plant ingredients, decaffeination and degreasing, typically with carbon dioxide.

Supercritical fluid reaction SFR
Chemical reaction taking place in a supercritical fluid. Usually applied to replace organic solvents.

System control and data acquisition SCADA
Monitoring and control of technical processes by means of control software, which is installed on a central control system in a network, to which other units are connected to get an overview of the complete production unit's state and cycles. Another purpose is to collect dedicated data, to be logged on a central repository and to be put into a report file record to document the complete production data.

Tetrahydrothiophene THT
An organic sulfur compound with an intense odor, used as an odorant for natural gas.

Vapor pressure
Pressure at which the fluid begins to evaporate.

Variable frequency drive VFD
Variable frequency drive, also termed frequency inverter or frequency converter, is a device used in a drive system to control AC motor speed by varying motor input frequency and voltage.

Vent valve
Removes gas bubbles from the hydraulic chamber by pumping a small defined quantity of oil or an air-oil mixture into the reservoir for each stroke. Vent valves are installed at the highest point of the hydraulic chamber.

Virtual private network VPN
A VPN is a virtual private communication network, which uses an existing communication network as a medium of transportation.

Working space/working chamber
Space in front of the diaphragm between the process valves which contains the pumped fluid.

List of figures

Formula directory

All units are listed in SI units.

Symbol	Unit	Name
A	m^2	Area
A_p	m^2	Plunger surface area
a_p	m/s^2	Plunger acceleration
c	m/s	Wave propagation velocity, sound velocity
D	m	Plunger diameter
d	m	Diameter
F	N	Force
F_{res}	N	Resulting force
f	Hz	Frequency
f_{rated}	Hz	Rated frequency
g	m/s^2	Gravitational acceleration
H	m	Pressure head
Δh	m	Height difference
I	A	Current
i	-	Number of pump heads
l	m	Length, connecting rod length
M	Nm	Torque
M_{rated}	Nm	Rated torque
M_s	Nm	Stall torque
$M_{s\text{-}reduced}$	Nm	Stall torque in the field-weakening range
n	1/s	Stroke frequency, motor speed
n_{rated}	1/s	Rated motor speed
$\dot{m}$	kg/s	Mass flow rate
P	W	Power
P_d	W	Drive power
P_{hyd}	W	Hydraulic power
P_{rated}	W	Rated power
p	Pa	Pressure
p_{acc}	Pa	Acceleration pressure
$p_{dynamic}$	Pa	Dynamic pressure
p_{mean}	Pa	Mean pressure
p_{min}	Pa	Minimum pressure
p_{static}	Pa	Static pressure
p_t	Pa	Tank pressure
Δp	Pa	Pressure difference
$\Delta p_{friction}$	Pa	Friction pressure losses
R	m	Eccentricity
r	m	Eccentric offset
s	m	Stroke length
s_0	m	Stroke length needed for compression phase, measured value for adaptive volume flow control
s_{100}	m	Maximum stroke length
s_c	m	Stroke length needed for compression phase
s_e	m	Stroke length needed for expansion phase
s_p	m	Plunger travel, plunger distance
t	s	Time
Δt_c	s	Time needed for compression phase
Δt_e	s	Time needed for expansion phase
U	V	Voltage
U_{rated}	V	Rated voltage
V	m^3	Volume
$\dot{V}$	m^3/s	Actual flow rate
$\dot{V}_L$	m^3/s	Leakage loss
V_s	m^3	Stroke volume
$\dot{V}_{th}$	m^3/s	Theoretical flow rate
$\dot{V}_x$	m^3/s	Excess replenished hydraulic oil volume flow
$\dot{V}_y$	m^3/s	Hydraulic oil volume flow released by the PRV
v	m/s	Flow speed
v_p	m/s	Plunger velocity
Δv	m/s	Speed change
X	m	Distance of center of rotation from cross head
γ	-	Polytropic exponent
ζ	-	Coefficient of friction
η_e	-	Degree of elasticity
η_f	-	Efficiency factor
η_g	-	Quality grade
η_{gear}	-	Gear efficiency
η_P	-	Energy efficiency
η_v	-	Volumetric efficiency
κ	%	Relative compression, relative compressibility
λ	-	Thrust rod ratio
ρ	kg/m^3	Density
ρ_1	kg/m^3	Density on the suction side
ρ_2	kg/m^3	Density on the discharge side
φ	°	Rotation angle
χ	1/Pa	Compressibility
ω	rad/s	Rotation angle velocity

Reference list

ANSI/API Standard 610, *Centrifugal Pumps for Petroleum, Petrochemical and Natural Gas Industries*, 11th Edition, September 2010, Errata, July 2011.

ANSI/HI 6.6, *Reciprocating Pump Tests,* Hydraulic Institute, Parsippany, New Jersey, 2015.

ANSI/NACE MR0103/ISO 17495-1:2016, *Petroleum, petrochemical and natural gas industries – Metallic materials resistant to sulfide stress cracking in corrosive petroleum refining environments*, Approved November 23, 2015.

API 674, *Positive Displacement Pumps – Reciprocating,* Edition December 2010, Errata May 2014, Errata 2, April 2015, Reaffirmed, November 2016.

API 675, *Positive Displacement Pumps – Controlled Volume for Petroleum, Chemical, and Gas Industry Services, API Standard 675,* 4th Edition, November 2012, Errata, June 2014, Errata 2, April 2015.

AUMA, *AUMA Explosionsgeschütze Antriebe SAEx und SAREx,* 2017, https://www.auma.com/index.php?eID=ix_product_ajax&action=download&fileUID=1850 (accessed 07-13-2017).

AUMA, *Homepage Documents,* 2017, https://www.auma.com/de/dokumente (accessed 07-13-2017).

Böswirth, Leopold, *Technische Strömungslehre, Lehr- und Übungsbuch,* 8th Edition, Wiesbaden: Viweg & Teubner, 2010.

Canadian Standards Association, *Canadian Electrical Code,* 24th edition, 2018.

Commission regulation (EC) No 640/2009, *Implementing Directive 2005/32/EC of the European Parliament and of the Council with regard to ecodesign requirements for electric motors,* 07-22-2009.

Demtröder, Wolfgang, *Experimentalphysik 1, Mechanik und Wärme,* 4th Edition. Berlin, Heidelberg, New York: Springer, 2006.

Die Sterling Fluid Systems-Gruppe, *Grundlagen für die Planung von Kreiselpumpenanlagen,* 7th revised and extended edition, Itzehoe: Sterling SIHI GmbH, 2000.

DIN EN ISO 3744, *Acoustics – Determination of sound power levels and sound energy levels of noise sources using sound pressure – Engineering methods for an essentially free field over a reflecting plane,* February 2011.

DIN EN ISO 12100, *Safety of machinery – General principles for design – Risk assessment and risk reduction,* 2010.

DIN EN 809, *Pumps and pump units for liquids – Common safety requirements,* 2012.

DIN EN 60034-30-1:2014-12, *Rotating electrical machines – Part 30-1: Efficiency classes of line operated AC motors,* December, 2014.

Directive 1999/92/EC of the European Parliament and of the Council on minimum requirements for improving the safety and health protection of workers potentially at risk from explosive atmospheres (15th individual Directive within the meaning of Article 16(1) of Directive 89/391/EEC), 12-16-1999.

Directive 2006/42/EC of the European Parliament and of the Council on machinery, and amending Directive 95/16/EC, 05-17-2006.

Directive 2009/125/EC of the European Parliament and of the Council establishing a framework for the setting of ecodesign requirements for energy-related products, 10-21-2009.

Directive 2014/34/EU of the European Parliament and of the Council on the harmonisation of the laws of the Member States relating to equipment and protective systems intended for use in potentially explosive atmospheres Text with EEA relevance, 02-26-2014.

IEC 60079-0:2017, *Explosive atmospheres – Part 0,* Equipment General requirements, 2017.

International Electrotechnical Commission System for Certification to Standards Relating to Equipment for Use in Explosive Atmospheres, IECEx COC, 2008.

ISO/IEC 80079-34:2011, *Explosive atmospheres – Part 34: Application of quality systems for equipment manufacture,* 2011.

Eichhammer, Fleiter, Schlomann, Strigel, *Energieeffizienzdaten für den Kimaschutz,* Klimabericht, Dessau-Roßgau, Umweltbundesamt, 2012.

Eifler, Schlücker, Will-Küttner, Spicher, *Kolbenmaschinen,* 7th Edition, Wiesbaden: Vieweg & Teubner, 2009.

Energy institute, *Guidelines for the Avoidance of Vibration Induced Fatigue Failure in Process Pipework,* 2nd Edition, London: Energy institute, January 2008.

Engineering Dynamics, *Vibrations in Reciprocating Machinery and Piping Systems,* EDI Report 41450, Texas, Engineering Dynamics, May 1995.

Fritsch, Horst, *Dosierpumpen: Grundlagen, Konstruktionen, Anwendung,* Landsberg, Verlag moderne Industrie, 1989.

Hydraulic Institute, *Hydraulic Institute Pump Systems Assessment (PSA) Certificate Program Focuses on Methods to Identify Pump Efficiency Improvement Opportunities,* http://empoweringpumps.com/hydraulic-institute-pump-systems-assessment-certificate-program-focuses-on-methods-to-identify-pump-efficiency-improvement-opportunities (accessed 08-10-2017).

ISO 13710, *Petroleum, petrochemical and natural gas industries – Reciprocating positive displacement pumps,* 1st Edition, 07-01-2004.

Wachel, Tison, Price, *The Effect of Pulsation on Cavitation in Reciprocating Pump Systems, Presented at the Energy-Sources Technology Conference and Exhibition,* Houston, January 22-25, 1989.

Kiefer, Susan Werner, *Sound Speed in Liquid-Gas Mixtures: Water-Air and Water-Steam. Journal of geophysical research* (University of California), no. Vol. 82, No. 20, July 1977: 2895-2904.

NACE MR 0175/ISO 15156:2015, *Petroleum and natural gas industries – Materials for use in H_2S-containing environments in oil and gas production,* 2015.

NFPA National Fire Protection Association, *National Electrical Code (NEC),* 2017.

NORSOK Standard M-501, *Surface preparation and protective coating,* 6th Edition, February 2012.

NORSOK Standard M-630, *Material data sheets for piping,* Rev. 4. January 2004.

NORSOK Standard M-650, *Qualification of manufacturers of special materials,* 4th Edition, September 2011.

NORSOK, *Standard Norge,* www.standard.no, (accessed 09-04-2017).

Piesche, Prof. Dr.-Ing., *Mehrphasenströmungen, Kap. 6, Vorlesungsskript,* Institut für Mechanische Verfahrenstechnik, Universität Stuttgart, WS 2002/2003.

Seehofer, Uwe, *Untersuchungen am Membranpumpen im Teilkavitationsbereich,* Diplomarbeit, Leonberg, 1996.

VDMA, *NPSH bei oszillierenden Verdrängerpumpen,* 1st Edition, Frankfurt a. M., Maschinenbau-Verlag GmbH, 1989.

Index

E

F

G

H

I

K

L

M

N

O

P

Q

R

S

T

V

W

Many thanks to all the colleagues
who participated in creating this book.

Authors:

Rüdiger Bullert
Nina Dietz
Matthias Dörling
Martin Dreher
Felix Theodor Farack
Fabian Geiger
Marco Klinkigt
Martin Schmid
Michael Wimmer
Anke-Dorothee Wöhr

Additional colleagues who helped in creating this book:

Dieter Bareiß
Henk Beets
Thomas Bökenbrink
Joachim Bund
Lea Frey
Roman Gobitz-Pfeiffer
Albrecht Hild
Hans-Joachim Johl
Kazim Konus
Mathias Möller
Ronja Pecher
Antonio Polo
Roland Schwab
Jörg Sommer
Kevin Strecker
Karl-Heinz Vogler
Maurice Wirkner
Heinz Woldering

LEWA GmbH
Ulmer Str. 10
71229 Leonberg
Germany